'19 NEXT GENERATION
BUILT-IN **APPLIANCES**

SILVERLINE

ABOUT SILVERLINE

Silverline is one of the world's leading brands in the production and sales of built-in products. With an annual production volume of 1.2 million units, Silverline exports its products to approximately 70 countries worldwide.

Silverline has proven its reliability after having received numerous prestigious awards in various prominent European design contests. Silverline has received Reddot, Plus X, iF Design, IDA Design and German Design awards in the fields of innovation and design.

Contents

Ovens 8
"Hi" Smart Ovens 16
Multifunction Electric Ovens 18
Static Electric Ovens 28
Gas Ovens 30
Free Standing Cookers 32
Microwave Ovens 36
Hobs 42
Induction Hobs 46
Vitro Ceramic Hobs 48
Glass Built-in Hobs 50
Myflame Hobs 66
Stainless Steel Hobs 68
Freestanding Hobs 74
Hoods 76
Worktop Hoods 82
Suspended Hoods 92
Island Hoods 98
Ceiling Hoods 102
Wall-Mounted Hoods 112
Built-In Hoods 132
Accessories 140
External Motors 142
Remote Control 144
Retro Series 146
Refrigerators 154
Freezer 171
Dishwashers 176
Washing Machine 182

next generation kitchen experience

The dynamics of the age we are living in are our guide. Demand,likes, trends. Our corporate culture is based on the know-how and experience we have accumulated throughout our history. All these values constitute the commitment we represent. Contemporary, far-from-obsolete, innovative products employing the latest technologies and improving quality of life.

silverlinedesignstrategy

simple+

our design approach

The kitchens in our living spaces have had different meanings throughout ages. Today, the kitchen is more than just a cooking area in our homes. New urban lifestyles, such as high technology, common area use and high efficiency, have changed the characteristics of kitchens, making them more integrated into our daily lives. Therefore, Silverline offers an approach that focuses on the changes in the meaning and characteristics of the kitchen while creating new design solutions.

Based on sectoral trends in our designs in the cooking appliances line, we looked for new ways that are meaningful and fascinating for the end user, that emphasize the strong stance of the brand in the built-in appliances industry, that are user-centered and are simplified for the user.

OVENS

The kind of multi-functionality that adds taste to your meals and makes expert cooks envious at the same time is now integrated with a multi-dimensional understanding of design.

SMART SUPPORT

Easy and fast way to access after sales support. It enables quick access for after sales support in case of a problematic issue via mobile application.

3D AIR FLOW

It provides proper heat distribution for uniform cooking and convenient for cooking up to 3 trays.

AUTOMATIC PROGRAM

Thanks to the automatic cooking programs, the cooking choice is offered automatically according to the type of food.

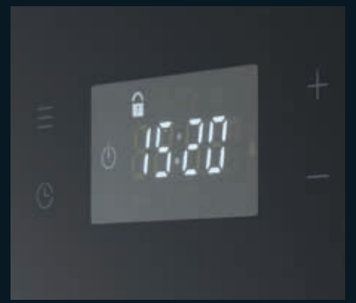

CHILD SCREEN LOCK

No matter what key your child plays on the screen, the settings of your oven can't be changed.

LARGE CAVITY SIZE

It gives flexibility to prepare larger meals with its 72 liter net volume.

COOL DOOR

The reflective glass on the inside of the door significantly reduces the temperature of the outer part of the door at all ovens. So, it provides a safer environment when preparing the delicious meals in the oven.

SOFT CLOSE

It slows down the movement of the door and ensures your oven door closes gently.

SOFT OPEN CLOSE

It slows down the movement of the door and ensures your oven door opens and closes gently.

TELESCOBIC EXTENTION

Allows you to remove trays easily from the oven. This makes usage of trays more convenient and easy to use.

MEAT PROBE

It gives very accurate cooking results by measuring the internal temperature of the food.

Easy Cleaning:
It’s time for a little magic!

Cleaning the oven can be an easy scrub free task with just a little bit of work. Silverline makes the cleaning of the ovens much easier by offering various cleaning solutions. They prolongs the life of your oven and help you save time every day to make your life easier in your kitchen.

SELFCLEAN +

The quick and easy option for effortless cleaning thanks to catalytic panels. The back and side wall panels absorbs dirt that splashes from food.

SELFCLEAN

Above advantage is available only for back wall.

STEAM CLEAN

The heat turns water into steam and softens food residuals for easy cleaning.

PYROLYTIC CLEAN

It heats the inside of your oven to temperatures upwards of 480°C, turns food residual to ash.

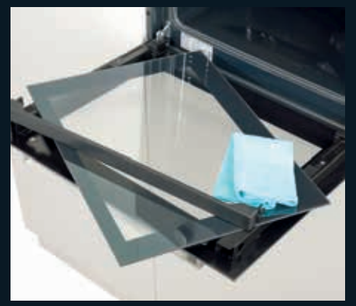

EASY EXTRACT

It enables to remove easily the front glass panels of the oven.

EASY CLEANING

The easy cleaning for day to day maintenance.

ANTI – FINGER INOX

Anti-finger inox surface provides comfort in cleaning.

LEGENDS

OVENS

BOTTOM RESISTANT: To cook something which needs to crisp on the base but stay moist on the top. This function is best suited for foods which need more temperature at the base such as pastry and pizzas and it is great for gently cooking stews and casseroles.

TOP RESISTANT: Top resistant creates the perfect roasting or crisping effect. Helps with the browning of dishes such as those topped with cheese or potatoes, under a less fiery heat than grill.

TOP RESISTANT + BOTTOM RESISTANT: Cooks items which sit in the centre of the oven best. Use this conventional heating mode for roasting meat and vegetables or baking cakes.

TOP RESISTANT + BOTTOM RESISTANT+ FAN: Food is cooked evenly and quickly all around thanks to lower and upper resistants and the fan are simultaneously on. This mode is most suitable for delicate cooking such as cakes, pastries, biscuits.

TOP RESISTANT + GRILL: Food can be cooked extremely quickly using both the top resistant and the grill.

TOP RESISTANT + GRILL + FAN : Top resistant, grill and fan are activated simultaneously, so heat is spread throughout the oven and radiated over the grill's surface area. It is ideal for larger portions.

TOP RESISTANT + FAN + RING HEATER + BOTTOM RESISTANT : Top and bottom resistants, turbo fan and ring heater(located around the turbo fan) are activated simultaneously. It provides proper heat distribution for uniform cooking and convenient for cooking up to 3 trays.

RING HEATER + FAN : It is used for one or more levels cooking and frying. Ring heater and turbo fan are activated.

DEFROST : It ensures that the food defrosts in a couple of minutes without losing its nutritional value.

BOOSTER: The booster function is used for quick pre-heating to reach the desired cooking temperature. (it is not suitable for cooking food.)

GRILL: Grill resistant is used especially for food to be fried.

FAN + BOTTOM RESISTANT : For preparing pizza and dishes which require a lot of heat from underneath. The bottom heating element and the fan are activated.

GRILL + FAN: This indicates the simultaneous activation of the grill and the turbo fan and enables the cooking of small portions of white and red meat, sausage, etc.

GRILL + FAN + BOTTOM RESISTANT : Appropriate for roasts and cakes. The fan spreads the heat uniformly inside the oven.

TURN SPIT (GRILL + SPIT) : It s used for rotisserie such as roasted chicken etc.

TURN SPIT + (TOP RESISTANT + GRILL + SPIT) : It s used for rotisserie such as roasted chicken etc. It is ideal for larger portions.

LIGHT: All ovens have oven lamps but the oven lamp can be activated with an independent button in the models bearing this symbol.

ECO (FAN + RING HEATER) : More energy saving function for one or more levels cooking and frying. Ring heater and turbo fan are activated.

STEAM CLEAN: The heat turns water into steam and softens food residuals for easy cleaning.

PYROLYTIC CLEAN: It heats the inside of your oven to temperatures upwards of 480°C, turns food residual to ash.

KEEP WARM : Used for keeping food warm at a temperature ready for serving for a long period of time.

GRILL + BOTTOM RESISTANT : Special for roasts. It can be used for any piece, whatever its size.

TOP FIRE + BOTTOM FIRE (GAS FURNACE) : Top and bottom elements are activated.

TOP FIRE (GAS FURNACE) : Top element is activated.

BOTTOM FIRE (GAS FURNACE) : Bottom element is activated.

IGNITION (GAS FURNACE) : Automatic ignition for gas area.

“HI” SMART **OVENS**

S6 - BO6506B01

S6 - BO6506W01

S6 - BO6506X01

A+ | A

- 60 cm
- Control panel: Tempered glass (BO6506B01, BO6506W01)
- Control panel: Anti-finger inox (BO6506X01)
- Door panel: Tempered glass
- 13 cooking functions
- Endless ring navigator knob control
- Full HD display touch control
- Screen child lock
- Rapid pre-heating
- Removable side racks
- 3 telescopic rails
- Grill, thermostat, turbo fan
- Cooling fan
- 2 oven lights
- 1 chrome grid, 1 deep and 1 standard tray
- 72 l net volume
- A+ / A energy class
- Meat probe which enables to measure the meat's cooking degree
- Eco mode for energy saving
- Keep warm function
- Automatic cooking programs
- Quadruple glass door

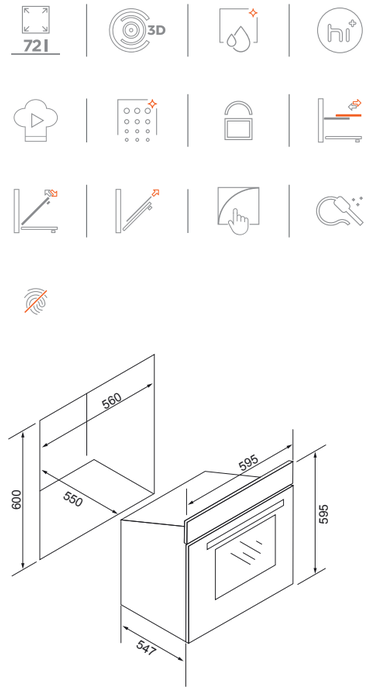

MULTIFUNCTION ELECTRIC **OVENS**

S5 - BO6505B01

S5 - BO6505W01

S5 - BO6505X01

A

- 60 cm
- Control panel: Tempered glass (BO6505B01, BO6505W01)
- Control panel: Anti-finger inox (BO6505X01)
- Door panel: Tempered glass
- 13 cooking functions
- 2 electro-mechanic knobs
- Advanced LED screen
- Screen child lock
- Rapid pre-heating
- Removable side racks
- 2 telescopic rails
- Grill, thermostat, turbo fan
- Cooling fan
- Oven light
- 1 chrome grid, 1 deep and 1 standard tray
- 72 l net volume
- A energy class
- Optional: Meat probe which enables to measure the meat's cooking degree
- Eco mode for energy saving
- Keep warm function
- Triple glass door

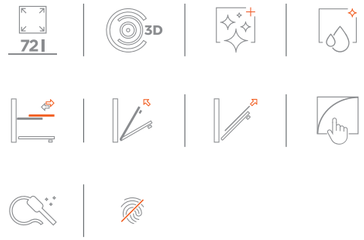

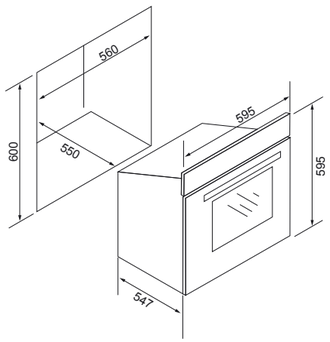

MULTIFUNCTION ELECTRIC **OVENS**

S5 - BO6505S01

S5 - BO6505M01

A

- 60 cm
- Control panel: Tempered glass (BO6505B01, BO6505W01)
- Control panel: Anti-finger inox (BO6505X01)
- 13 cooking functions
- 2 electro-mechanic knobs
- Advanced LED screen
- Screen child lock
- Rapid pre-heating
- Removable side racks
- 2 telescopic rails
- Grill, thermostat, turbo fan
- Cooling fan
- Oven light
- 1 chrome grid, 1 deep and 1 standard tray
- 72 l net volume
- A energy class
- Optional: Meat probe which enables to measure the meat's cooking degree
- Eco mode for energy saving
- Keep warm function
- Triple glass door

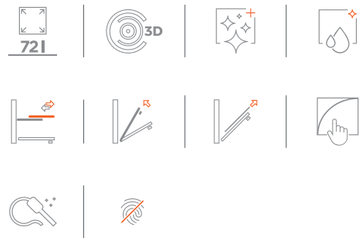

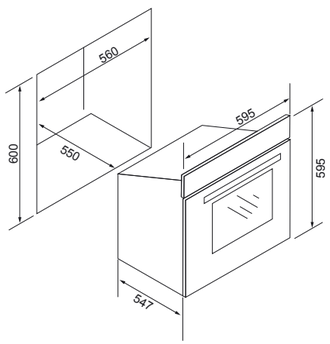

MULTIFUNCTION ELECTRIC **OVENS**

S4 - BO6504B01

S4 - BO6504W01

S4 - BO6504X01

A

- 60 cm
- Control panel: Tempered glass (BO6504B01, BO6504W01)
- Control panel: Anti-finger inox (BO6504X01)
- 8 cooking functions
- 2 push-pull knobs
- Advanced digital timer - Alarm and time programmer
- Screen child lock
- Rapid pre-heating
- Removable side racks
- Telescopic rail
- Grill, thermostat, turbo fan
- Cooling fan
- Oven light
- 1 chrome grid, 1 deep and 1 standard tray
- 72 l net volume
- A energy class
- Double glass door

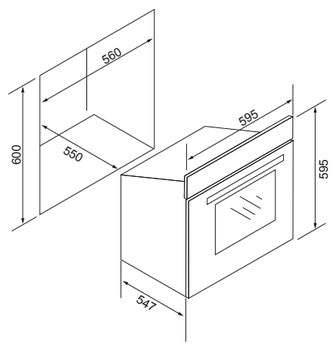

S4 - BO6504S01

S4 - BO6504M01

A

- 60 cm
- Control panel: Tempered glass (BO6504S01, BO6504M01)
- 8 cooking functions
- 2 push-pull knobs
- Advanced digital timer - Alarm and time programmer
- Screen child lock
- Rapid pre-heating
- Removable side racks
- Telescopic rail
- Grill, thermostat, turbo fan
- Cooling fan
- Oven light
- 1 chrome grid, 1 deep and 1 standard tray
- 72 l net volume
- A energy class
- Double glass door

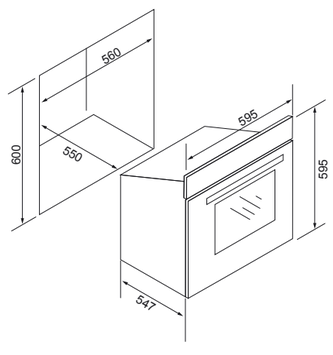

MULTIFUNCTION ELECTRIC **OVENS**

S3 - BO6503B01

S3 - BO6503W01

S3 - BO6503X01

A

- 60 cm
- Control panel: Tempered glass (BO6503B01, BO6503W01)
- Control panel: Anti-finger inox (BO6503X01)
- 8 cooking functions
- 3 push-pull knobs
- Rapid pre-heating
- Removable side racks
- Telescopic rail
- Grill, thermostat, turbo fan
- Cooling fan
- Oven light
- 1 chrome grid, 1 deep and 1 standard tray
- 72 l net volume
- A energy class
- Double glass door

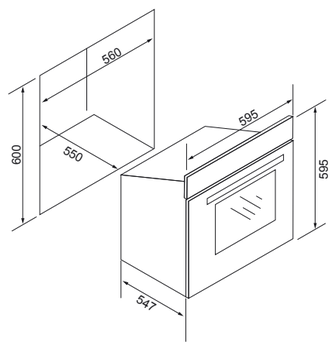

S2 - BO6502B01

S2 - BO6502W01

S2 - BO6502X01

A

- 60 cm
- Control panel: Tempered glass (BO6502B01, BO6502W01)
- Control panel: Anti-finger inox (BO6502X01)
- 6 cooking functions
- 2 standard knobs : Function, temprature
- Digital timer - Alarm and time programmer
- Screen child lock
- Rapid pre-heating
- Removable side racks
- Grill, thermostat, turbo fan
- Cooling fan
- Oven light
- 1 chrome grid, 1 deep and 1 standard tray
- 72 l net volume
- A energy class
- Double glass door

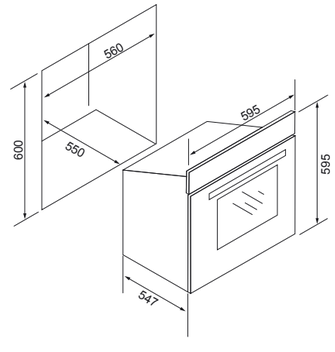

MULTIFUNCTION ELECTRIC **OVENS**

S1 - BO6501B01

A

- 60 cm
- Control panel: Tempered glass (BO6501B01, BO6501W01)
- Control panel: Anti-finger inox (BO6501X01)
- 6 cooking functions
- 2 standard knobs: Function, temperature
- Rapid pre-heating
- Removable side racks
- Grill, thermostat, turbo fan
- Cooling fan
- Oven light
- 1 chrome grid, 1 deep and 1 standard tray
- 72 l net volume
- A energy class
- Double glass door

S1 - BO6501W01

S1 - BO6501X01

72 l

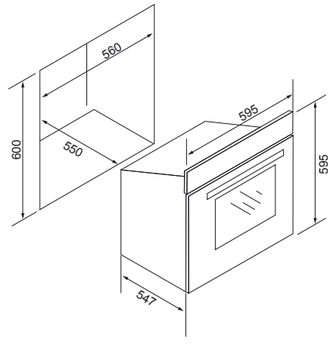

BO6233X01

A

- 90 cm
- Control panel: Anti-finger stainless steel
- Door panel: Black tempered glass
- 9 cooking functions
- 3 standard knobs
- Removable side racks
- Minute minder
- Thermostat, turbo fan
- Double grill
- Drop-down grill
- Cooling fan
- 2 oven lights
- 1 chrome grid, 1 deep tray
- 91 l net volume
- A energy class
- Double glass door

91 l

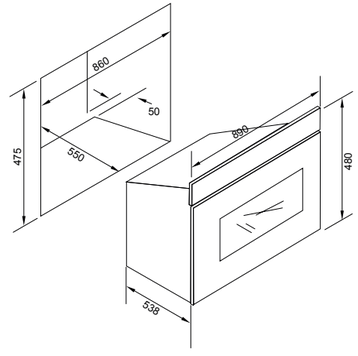

STATIC ELECTRIC **OVENS**

S1 EL - BO6501B03

S1 EL - BO6501W03

S1 EL - BO6501X03

A

- 60 cm
- Control panel: Tempered glass (BO6501B03, BO6501W03)
- Control panel: Inox (BO6501X03)
- 4 cooking functions
- 2 standard knobs: Function, temperature
- Grill, thermostat
- Cooling fan
- Oven light
- 1 chrome grid, 1 deep tray
- 72 l net volume
- A energy class
- Double glass door

72l

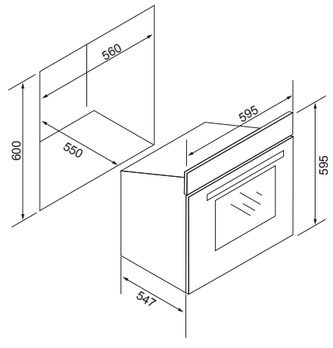

BO6247B01

A

- 60 cm
- Control panel: Mat enamel black
- Door panel: Black tempered glass
- 3 cooking functions
- 2 standard knobs: Function, temprature
- Thermostat
- Cooling fan
- Oven light
- 1 chrome grid, 1 deep tray
- 61 l net volume
- A energy class
- Double glass door

61l

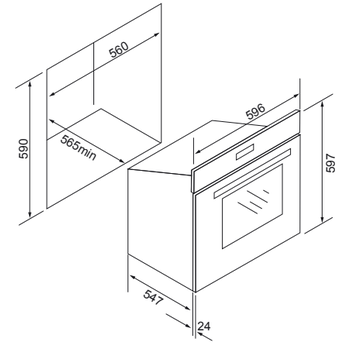

GAS OVENS

BO6085X01

- 60 cm
- Gas Upper and Gas Bottom Heating
- 3 functions
- 45 l
- Control Panel: Inox
- Door panel: Upper and Lower Horizontal Inox Border
- 2 Silver Knobs
- Digital Electronic Timer
- Automatic Ignition
- Flame Failure Device
- Turnspit (Optional)
- 1 Oven Light
- 1 chrome grid, 1 deep tray
- Cooling fan
- Double glass door

BO6087X01

- 60 cm
- 3 functions
- 45 l
- Gas Upper and Gas Bottom Heating
- Control Panel: Inox
- Door panel: Upper and Lower Horizontal Inox Border
- 2 Silver Knobs
- Automatic Ignition
- Flame Failure Device
- Turnspit (Optional)
- 1 Oven Light
- 1 chrome grid, 1 deep tray
- Cooling Fan
- Double glass door

BO6232X01

- 90 cm
- 3 functions
- 88 l
- Control panel: Anti finger Stainless Steel
- Door panel: Anti finger Stainless Steel Frame
- 3 Metallic knobs (Mechanic control)
- Oven cavity with smooth sides and removable side racks
- Minute minder
- Automatic Gas Oven ignition
- Flame failure device
- Grill (GAS)+ Turnspit
- Adjustable thermostat
- Double lateral lighting
- Deep tray with Crystal clean enamel / grid
- Double glass door

BO6277X01

- 90 cm
- 88 l
- Control panel: stainless steel
- Door panel: Black tempered glass
- GAS oven with gas grill
- Ventilated with turnspit
- Turbofan
- Minute minder 0-60'
- Double glass door
- Turnspit
- 1 chrome grid, 1 standard tray

BO6277B01

- 90 cm
- 88 l
- Black tempered glass
- Door panel: Black tempered glass
- GAS oven with gas grill
- Ventilated with turnspit
- Turbofan
- Minute minder 0-60'
- Double glass door
- Turnspit
- 1 chrome grid, 1 standard tray

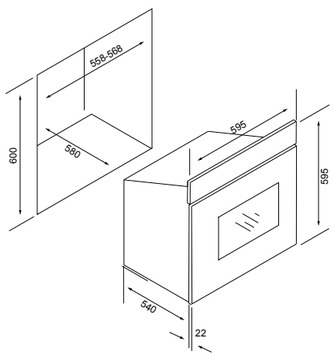

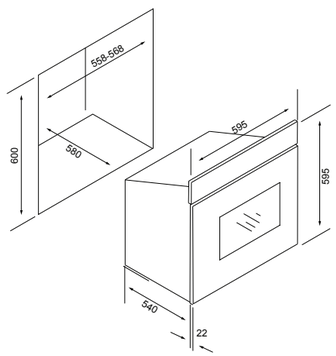

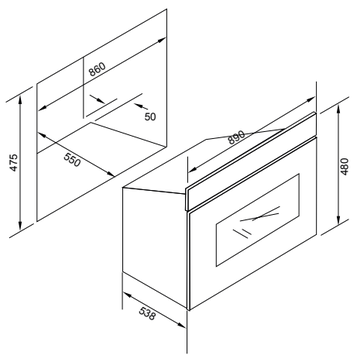

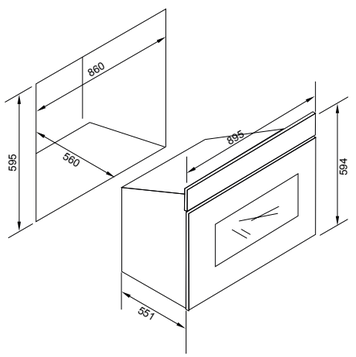

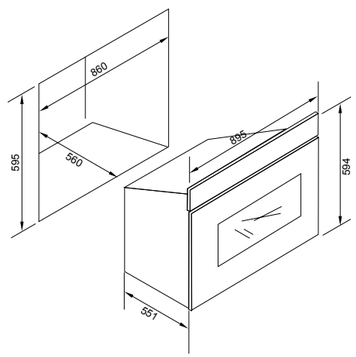

FREE STANDING **COOKERS**

FO6218B01

FO6218W01

FO6218I01

- 50x60, 50x60 or 60x60 size options
- Gas Oven
- Electrical Grill
- 3 Gas Burners – 1 HP (145mm 1000W)
- Glass Top Lid
- Enamel Pan Support
- Turnspit
- Ignition
- Oven Lamp
- 1 chrome grid, 1 standard tray
- Adjustable feet
- Black, White, Inox colour

FO6263B01

FO6263W01

FO6263I01

- 50x60, 50x60 or 60x60 size options
- Gas Oven
- Electrical Grill
- 4 Gas Burners
- Glass Top Lid
- Enamel Pan Support
- Turnspit
- Ignition
- Oven Lamp
- 1 chrome grid, 1 standard tray
- Adjustable feet
- Black, White, Inox colour

FO6145B01

FO6145W01

FO6145I01

- 50x60, 50x60 or 60x60 size options
- Gas Oven
- Gas Grill
- 4 Gas Burners
- Metal Top Lid
- Cool Door(Removable Inner Glass)
- Enamel Pan Support
- Auto Ignition For Hob
- Oven Lamp
- 1 chrome grid, 1 standard tray
- Adjustable feet
- Black, White, Inox colour

FREE STANDING **COOKERS**

FO6243B01

FO6243W01

FO6243I01

- 50x60, 50x60 or 60x60 size options
- Gas Oven
- Gas Grill
- 4 Gas Burners
- Metal Top Lid
- Double glass door
- Enamel Pan Support
- Push Button Ignition For Hob
- Oven Lamp
- 1 chrome grid, 1 standard tray
- Adjustable feet

FO6278W01

FO6279W01

- 50x60 or 60x60 size options
- Electrical Oven
- Thermostat
- 4 hot plates
- Metal Top Lid
- Double Glass Oven Door
- Oven Lamp
- 1 chrome grid, 1 standard tray
- White Colour
- Optional: Turbo fan, turnspit, digital timer

MICROWAVE

The meals you like in just one touch! Silverline offers wide range built-in microwave ovens that complete your kitchen design.

MICROWAVE **OVENS**

10 Program | 32 Liter | 5 Level

MW9021X01

Built-In Microwave Frameless Oven

- Microwave + Grill cooking
- Convection cooking
- 4 combination cooking programs
- White colour LED display
- Digital Clock / 95 Minute non-segment digital timer
- 1550W input microwave power
- 1100W grill power
- 2500W microwave convection power
- 5 microwave power levels
- 10 Auto cooking programs
- Multi-cooking function
- Cooking end signal
- Defrost by weight and time
- Child safety lock
- Metal rack
- Glass turntable
- Stainless steel interior / window glass frontal panel
- Stainless steel control panel and front exterior
- Door Release Button
- Push-Pull Knob

8 Program | 34 Liter | 5 Level

MW9025X01

Built-In Microwave Frameless Oven

- Microwave cooking
- Grill cooking
- 2 combination cooking programs
- White colour LED digital display
- 95 Minute timer
- 1550W input microwave power
- 1000 W grill power
- 5 microwave power levels
- 8 auto cooking programs
- Multi-cooking function
- Quick start
- Cooking end signal
- Defrost by weight and time
- Child safety lock
- Metal rack
- Glass turntable
- Stainless steel interior
- Anti finger stainless steel control panel and front exterior
- Door Release Button
- Silver Buttons + Aluminum Dial Push Pull Knob

8 Program | 25 Liter | 5 Level

MW9013X01

Built-In Microwave Oven with Grill

- Microwave cooking
- Grill cooking
- 2 combination cooking programs (microwave & grill)
- Digital Clock / 95 min. non-segment digital timer
- 1450W input microwave power
- 1000 W grill power
- 5 microwave power levels
- 8 auto cooking programs
- Multi-cooking function
- Pre-set Cooking
- Auto reheat
- Quick start
- Cooking end signal
- Auto defrost function
- Child safety lock
- Metal rack
- Glass turntable
- Stainless steel interior / frontal panel
- Stainless steel built-in frame
- Push-out door

8 Program | 25 Liter | 5 Level

MW9024S01

Built-In Microwave Frameless type

- Microwave cooking
- Grill cooking
- 2 combination cooking programs
- White colour LED digital display
- Digital Clock / 95 min. non-segment digital timer
- 1450W input microwave power
- 1000 W grill power
- 5 microwave power levels
- 8 auto cooking programs
- Multi-cooking function
- Quick start
- Cooking end signal
- Defrost by weight and time
- Child safety lock
- Metal rack
- Glass turntable
- Stainless steel interior / window glass frontal panel
- Aluminum Handle Door

8 Program | 23 Liter | 5 Level

MW9018B01

Built-In Microwave Oven with Grill

- Microwave cooking
- Grill cooking
- 2 combination cooking programs (microwave & grill)
- Digital Clock / 95 min. non-segment digital timer
- 1400W input microwave power
- 1000 W grill power
- 5 microwave power levels
- 8 auto cooking programs
- Multi-cooking function
- Pre-set Cooking
- Quick start
- Cooking end signal
- Auto defrost function
- Child safety lock
- Metal rack
- Glass turntable
- Stainless steel interior
- Black glass built-in frame

8 Program | 23 Liter | 5 Level

MW9018W01

Built-In Microwave Oven with Grill

- Microwave cooking
- Grill cooking
- 2 combination cooking programs (microwave & grill)
- Digital Clock / 95 min. non-segment digital timer
- 1400W input microwave power
- 1000 W grill power
- 5 microwave power levels
- 8 auto cooking programs
- Multi-cooking function
- Pre-set Cooking
- Quick start
- Cooking end signal
- Auto defrost function
- Child safety lock
- Metal rack
- Glass turntable
- Stainless steel interior
- Black glass built-in frame

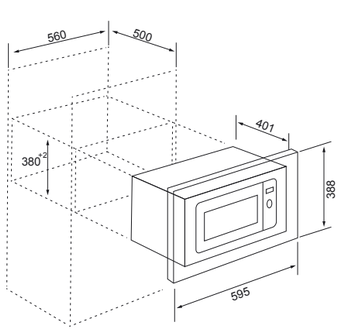

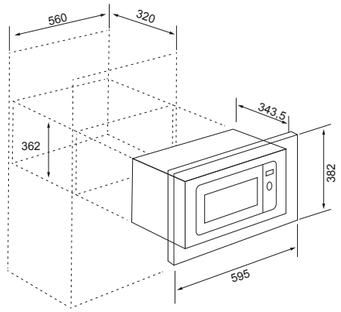

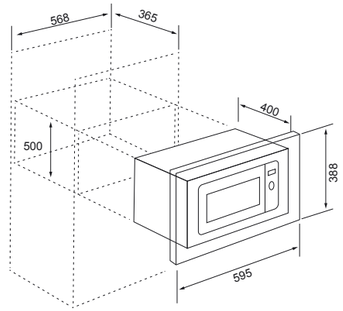

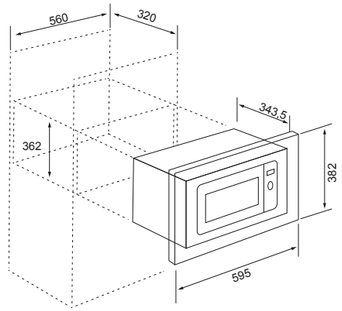

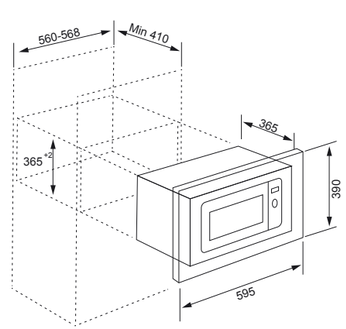

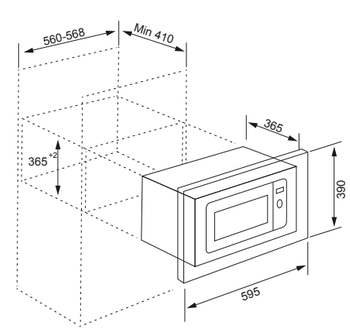

MICROWAVE **OVENS**

8 Program | **23** Liter | **5** Level

MW9018X01

Built-In Microwave Oven with Grill

- Microwave cooking
- Grill cooking
- 2 combination cooking programs (microwave & grill)
- Digital Clock / 95 min. non-segment digital timer
- 1400W input microwave power
- 1000 W grill power
- 5 microwave power levels
- 8 auto cooking programs
- Multi-cooking function
- Pre-set Cooking
- Quick start
- Cooking end signal
- Auto defrost function
- Child safety lock
- Metal rack
- Glass turntable
- Stainless steel interior
- Black glass built-in frame

8 Program | **20** Liter | **5** Level

MW9012X01

Built-In Microwave Oven with Grill

- Microwave cooking
- Grill cooking
- 2 combination cooking programs (microwave & grill)
- Digital Clock / 95 min. non-segment digital timer
- 1250W input microwave power
- 1000 W grill power
- 5 microwave power levels
- 8 auto cooking programs
- Multi-cooking function
- Pre-set Cooking
- Auto reheat
- Quick star
- Anti finger
- Option without anti finger
- Cooking end signal
- Defrost by weight and time
- Child safety lock
- Metal rack
- Glass turntable
- Stainless steel interior / window glass frontal panel
- Stainless steel built-in frame
- Push-out door

8 Program | **20** Liter | **6** Level

MW9035B01

Built-In Microwave Oven with Grill

- Microwave cooking
- Grill cooking
- 2 combination cooking programs (microwave & grill)
- Digital clock
- 900 W grill power
- 700 W output microwave power
- 6 microwave power levels
- 8 auto cooking programs
- Express cooking
- Pre-set Cooking
- Cooking timer
- Cooking end signal
- Child safety lock
- Auto & Speed Defrost function
- Glass turntable
- Stainless steel interior

20 Liter | **5** Level

MW9036W01

Free-Standing Microwave Oven

- 700 W output microwave power
- 6 microwave power levels
- Mechanical control
- Cooking timer
- Cooking end signal
- Defrost function
- White painting interior

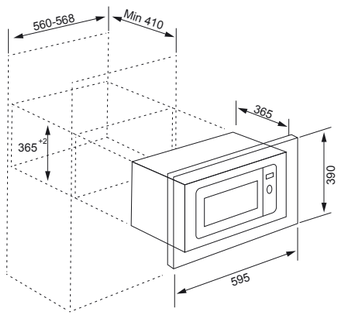

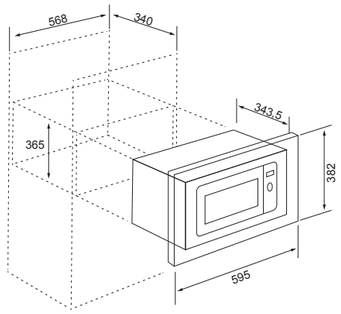

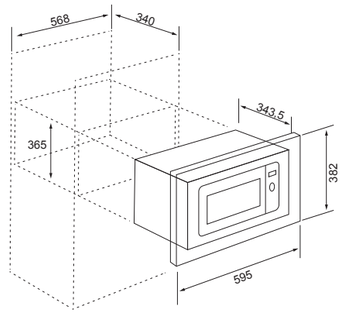

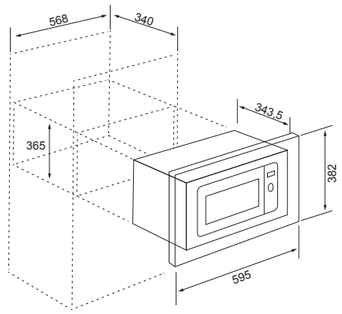

HOBS

Very step on the path to culinary art forms a part of a whole. Strong designs, advanced technology, multi-functionality.

GAS HOB

Combustion of gas is used as the source of heat.

GAS PROOF SAFETY

It cuts off the gas supply immediately to ensure full safety.

VITROCERAMIC HOB

Intensive heat - resistant and shockproof ceramic glass surface (Resistant up to 850°C)

BRIDGE

Two separate cooking zones can be used as a single and large surface.

INDUCTION HOB

It is the high-frequency electromagnetic feature which transforms the container into a heat generator rather than conveying the heat it generated to the container

AFTER HEAT INDICATOR

The post-heating indicator shows whether it is safe to touch the surface.

EASY CLEANING

Easy cleaning for day to day maintenance.

TIME ASSISTANCE

The function of the closure of timer closes all of hotplates safety when selected time expired.

WIDTH 60 cm

60cm

The width of the oven.

CHILD SCREEN LOCK

The child safety lock inhibits all functions of the hob with a single button.

FIRING IGNITION

Automatic ignition system.

BOOSTER

This function is used to heat the oven rapidly; it is not suitable for cooking food.

FIRE CONTROL

Gives you precise, convenient fire control over all cooking zones.

INDUCTION **HOBS**

IH5367B01

- 90 cm induction hob
- Standard glass
- Touch control panel
- Pan optimization system
- Power plus function
- Security blocking
- Cooking time programmer
- Independent programmer of each cooking zone
- Residual heat indicator
- 4 cooking zones
- 1 induction element (210 mm Ø)
- 2 induction elements (180 mm Ø)
- 1 induction element (145 mm Ø)
- 1 induction element (145 mm Ø)
- Total nominal power: 7000 W

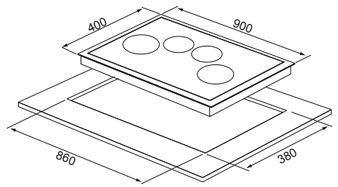

90cm

7400W
Power

FX5366B01

- Without bevelled glass
- Touch control "slider" with acoustic sensors and security blocking
- Pan optimization system
- Low-temp function
- Electronic timer (possibility to programme all the zones at the same time)
- Pan detector
- 2 x oval induction 235 x 190 mm
- 1 FLEX zone of 235 x 395 mm
- Power function in all induction elements (I1/2.200W – I2/2.200W)
- Residual heat indicators
- Ø180mm Hi-light heater (1800W) – Rear Right
- Ø210mm Hi-light heater (2100W) – Rear Left

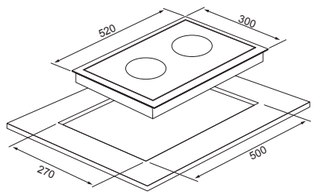

30cm

3500W
Power

IH5368B01

- Without bevelled glass
- Touch control with acoustic sensors and security blocking
- Pan optimization system
- Electronic timer
- Pan detector
- I1 induction Ø 145 mm
- I2 induction Ø 210 mm
- Power function in all induction elements (I1/1.800W – I2/3.000W)
- Residual heat indicators

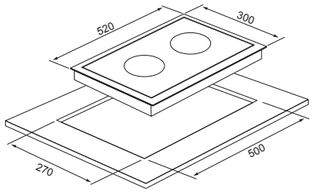

30cm

3200W
Power

VITRO CERAMIC **HOBS**

VC5338B01

- Decorative easy-clean vitro ceramic surface
- Touch control with timer
- Digital indicators
- Safety lock
- Residual heat indicators
- Power Level 9
- Ø140mm Hi-light heater (1200W) – Front Right
- Ø140mm Hi-light heater (1200W) – Front Left
- Ø180mm Hi-light heater (1800W) – Rear Right
- Ø210mm Hi-light heater (2100W) – Rear Left

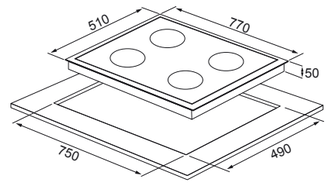

77 cm

6300W Power

VC5337B01

- Decorative easy-clean vitro ceramic surface
- Touch control
- Digital indicators
- Safety lock
- Residual heat indicators
- Power Level 9
- Ø140mm Hi-light heater (1200W) – Front Right
- Ø140mm Hi-light heater (1200W) – Front Left
- Ø180mm Hi-light heater (1800W) – Rear Right
- Ø210mm Hi-light heater (2100W) – Rear Left

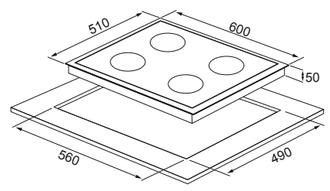

60 cm

6300W Power

VC5075B01

- Decorative easy-clean vitro ceramic surface
- Touch control with timer
- Digital indicators
- Safety lock
- Residual heat indicators
- Cooking timer: 99 dk
- Power Level 9
- 1 X Ø 180: 1800 W
- 1 X Ø 145: 1200 W

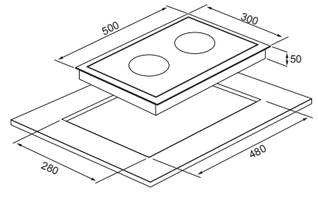

30cm

3000W Power

VC5354W01

- Decorative easy-clean vitro ceramic surface
- Touch control with timer
- Digital indicators
- Safety lock
- Residual heat indicators
- Power Level 9
- Ø140mm Hi-light heater (1200W) – Front Right
- Ø140mm Hi-light heater (1200W) – Front Left
- Ø180mm Hi-light heater (1800W) – Rear Right
- Ø210mm Hi-light heater (2100W) – Rear Left

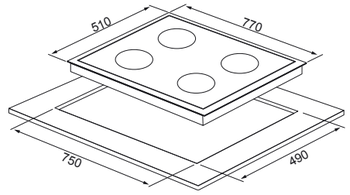

77 cm

6300W Power

VC5355W01

- Decorative easy-clean vitro ceramic surface
- Touch control
- Digital indicators
- Safety lock
- Residual heat indicators
- Power Level 9
- Ø140mm Hi-light heater (1200W) – Front Right
- Ø140mm Hi-light heater (1200W) – Front Left
- Ø180mm Hi-light heater (1800W) – Rear Right
- Ø210mm Hi-light heater (2100W) – Rear Left

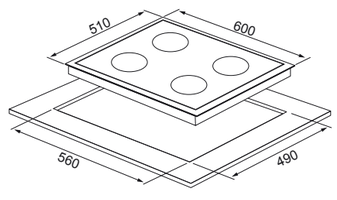

60 cm

6300W Power

GLASS BUILT-IN **HOBS**

60 cm | 7400W Power

CS5335B01

- 4 Gas Burners
- Enamel pan supports and burner caps
- Under knob auto-ignition
- Side mechanical control
- Safety Device
- 1 x Rapid burner: 2900 W
- 2 x Semi-rapid burner: 1750 W
- 1 x Auxiliary burner: 1000 W

60 cm | 7400W Power

CS5335W01

- 4 Gas Burners
- Enamel pan supports and burner caps
- Under knob auto-ignition
- Side mechanical control
- Safety Device
- 1 x Rapid burner: 2900 W
- 2 x Semi-rapid burner: 1750 W
- 1 x Auxiliary burner: 1000 W

60 cm | 7400W Power

CS5343B01

- 4 Gas Burners
- Cast iron pan supports and burner caps
- Under knob auto-ignition
- Side mechanical control
- Safety Device
- 1 x Rapid burner: 2900 W
- 2 x Semi-rapid burner: 1750 W
- 1 x Auxiliary burner: 1000 W

60 cm | 7400W Power

CS5343W01

- 4 Gas Burners
- Cast iron pan supports and burner caps
- Under knob auto-ignition
- Side mechanical control
- Safety Device
- 1 x Rapid burner: 2900 W
- 2 x Semi-rapid burner: 1750 W
- 1 x Auxiliary burner: 1000 W

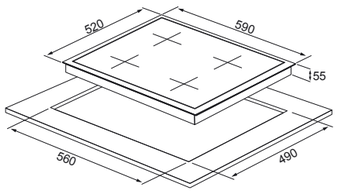

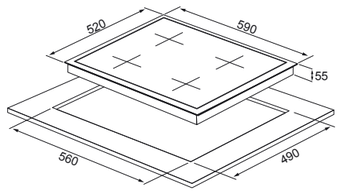

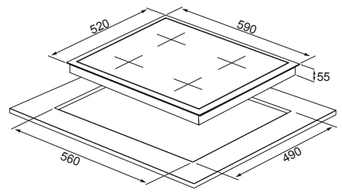

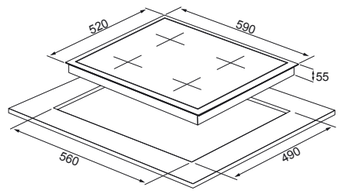

GLASS BUILT-IN **HOBS**

60 cm | 7400W Power

CS5343M01

- 4 Gas Burners
- Cast iron pan supports and burner caps
- Under knob auto-ignition
- Side mechanical control
- Safety Device
- 1 x Rapid burner: 2900 W
- 2 x Semi-rapid burner: 1750 W
- 1 x Auxiliary burner: 1000 W

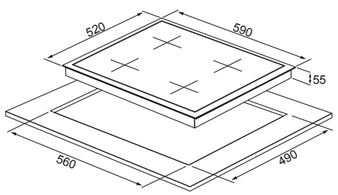

75 cm | 11200W Power

CS5364M01

- 5 Gas Burners (1 WOK Burner)
- Cast iron pan supports and burner caps
- Under knob auto-ignition
- Front mechanical control
- 1 x WOK burner: 3800 W
- 1 x Rapid burner: 2900 W
- 2 x Semi-rapid burner: 1750 W
- 1 x Auxiliary burner: 1000 W

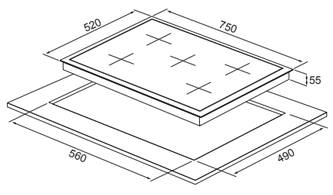

GLASS BUILT-IN **HOBS**

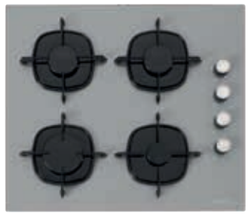

60 cm | 7400W Power

CS5335S01

- 4 Gas Burners
- Enamel pan supports and burner caps
- Under knob auto-ignition
- Side mechanical control
- Safety Device
- 1 x Rapid burner: 2900 W
- 2 x Semi-rapid burner: 1750 W
- 1 x Auxiliary burner: 1000 W

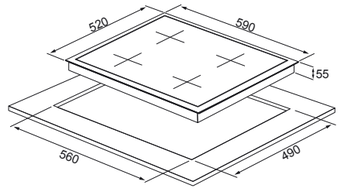

60 cm | 7400W Power

CS5343S01

- 4 Gas Burners
- Cast iron pan supports and burner caps
- Under knob auto-ignition
- Side mechanical control
- Safety Device
- 1 x Rapid burner: 2900 W
- 2 x Semi-rapid burner: 1750 W
- 1 x Auxiliary burner: 1000 W

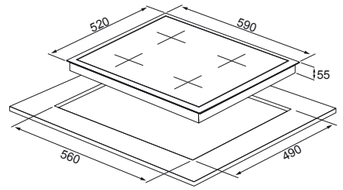

75 cm | 11200W Power

CS5364S01

- 5 Gas Burners (1 WOK Burner)
- Cast iron pan supports and burner caps
- Under knob auto-ignition
- Front mechanical control
- 1x WOK burner: 3800 W
- 1x Rapid burner: 2900 W
- 2 x Semi-rapid burner: 1750 W
- 1 x Auxiliary burner: 1000 W

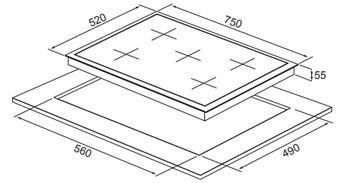

GLASS BUILT-IN **HOBS**

60 cm | 7150W Power

CS5430B01

- 3G+1H Gas Burners
- Cast iron pan supports and burner caps
- Under knob auto-ignition
- Side mechanical control
- Safety Device
- 1 x Rapid burner: 2900 W
- 1 x Semi-rapid burner: 1750 W
- 1 x Auxiliary burner: 1000 W
- 1 X Hot plate : 1500 W (rapid)

60 cm | 7150W Power

CS5430W01

- 3G+1H Gas Burners
- Cast iron pan supports and burner caps
- Under knob auto-ignition
- Side mechanical control
- Safety Device
- 1 x Rapid burner: 2900 W
- 1 x Semi-rapid burner: 1750 W
- 1 x Auxiliary burner: 1000 W
- 1 X Hot plate : 1500 W (rapid)

60 cm | 8100W Power

CS5429B01

- 3G+1W Gas Burners
- Cast iron pan supports and burner caps
- Under knob auto-ignition
- Side mechanical control
- Safety Device
- 2 x Semi-rapid burner: 1750 W
- 1 x Auxiliary burner: 1000 W
- 1 x Wok: 3600 W

60 cm | 8100W Power

CS5429W01

- 3G+1W Gas Burners
- Cast iron pan supports and burner caps
- Under knob auto-ignition
- Side mechanical control
- Safety Device
- 2 x Semi-rapid burner: 1750 W
- 1 x Auxiliary burner: 1000 W
- 1 x Wok: 3600 W

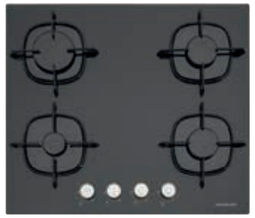

60 cm | 7400W Power

CS5436B01

- 4 Gas Burners
- Enamel pan supports and burner caps
- Under knob auto-ignition
- Front mechanical control
- Safety Device
- 1 x Rapid burner: 2900 W
- 2 x Semi-rapid burner: 1750 W
- 1 x Auxiliary burner: 1000 W

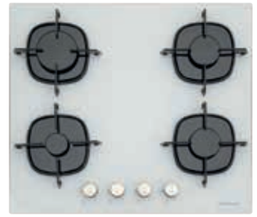

60 cm | 7400W Power

CS5436W01

- 4 Gas Burners
- Enamel pan supports and burner caps
- Under knob auto-ignition
- Front mechanical control
- Safety Device
- 1 x Rapid burner: 2900 W
- 2 x Semi-rapid burner: 1750 W
- 1 x Auxiliary burner: 1000 W

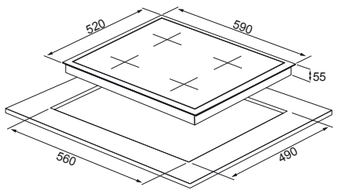

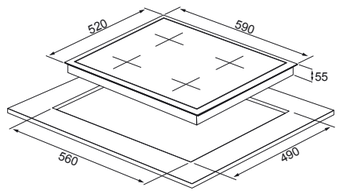

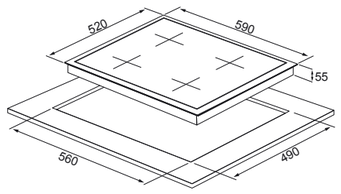

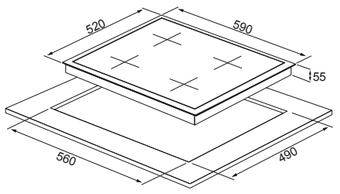

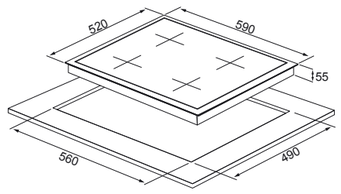

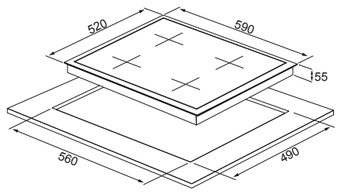

GLASS BUILT-IN **HOBS**

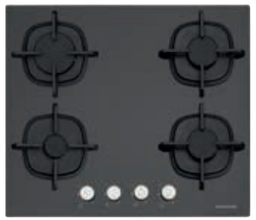

60 cm | Power 7400W

CS5437B01

- 4 Gas Burners
- Cast iron pan supports and burner caps
- Under knob auto-ignition
- Front mechanical control
- Safety Device
- 1 x Rapid burner: 2900 W
- 2 x Semi-rapid burner: 1750 W
- 1 x Auxiliary burner: 1000 W

60 cm | Power 7400W

CS5437W01

- 4 Gas Burners
- Cast iron pan supports and burner caps
- Under knob auto-ignition
- Front mechanical control
- Safety Device
- 1 x Rapid burner: 2900 W
- 2 x Semi-rapid burner: 1750 W
- 1 x Auxiliary burner: 1000 W

60 cm | Power 8100W

CS5407B01

- 3G+1W Gas Burners
- Cast iron pan supports and burner caps
- Under knob auto-ignition
- Front mechanical control
- Safety Device
- 1 x WOK burner: 3600 W
- 2 x Semi-rapid burner: 1750 W
- 1 x Auxiliary burner: 1000 W

60 cm | Power 8100W

CS5407W01

- 3G+1W Gas Burners
- Cast iron pan supports and burner caps
- Under knob auto-ignition
- Front mechanical control
- Safety Device
- 1 x WOK burner: 3600 W
- 2 x Semi-rapid burner: 1750 W
- 1 x Auxiliary burner: 1000 W

75 cm | Power 11200W

CS5364B01

- 5 Gas Burners (1 WOK Burner)
- Cast iron pan supports and burner caps
- Under knob auto-ignition
- Front mechanical control
- 1 x WOK burner: 3800 W
- 1 x Rapid burner: 2900 W
- 2 x Semi-rapid burner: 1750 W
- 1 x Auxiliary burner: 1000 W

75 cm | Power 11200W

CS5364W01

- 5 Gas Burners (1 WOK Burner)
- Cast iron pan supports and burner caps
- Under knob auto-ignition
- Front mechanical control
- 1 x WOK burner: 3800 W
- 1 x Rapid burner: 2900 W
- 2 x Semi-rapid burner: 1750 W
- 1 x Auxiliary burner: 1000 W

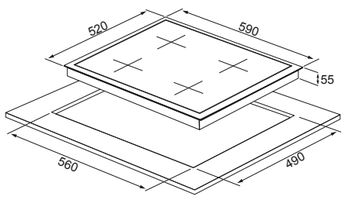

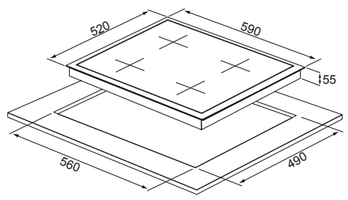

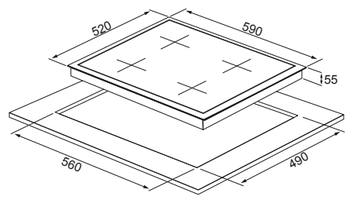

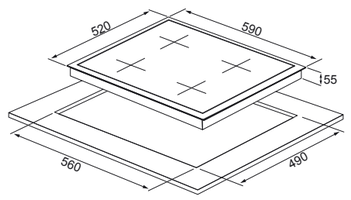

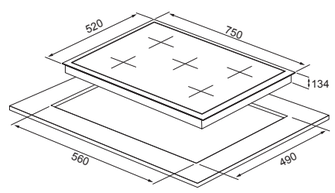

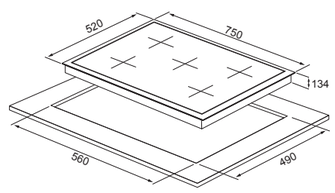

GLASS BUILT-IN **HOBS**

90 cm | 11200W Power

CS5363B01

- 5 Gas Burners (1 WOK Burner)
- Cast iron pan supports and burner caps
- Underknob auto-ignition
- Front mechanical control
- 1x WOK burner: 3800 W
- 1x Rapid burner: 2900 W
- 2 x Semi-rapid burner: 1750 W
- 1x Auxiliary burner: 1000 W

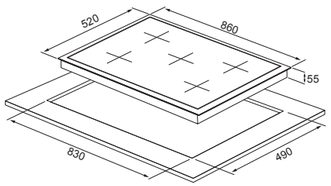

90 cm | 11200W Power

CS5363W01

- 5 Gas Burners (1 WOK Burner)
- Cast iron pan supports and burner caps
- Underknob auto-ignition
- Front mechanical control
- 1x WOK burner: 3800 W
- 1x Rapid burner: 2900 W
- 2 x Semi-rapid burner: 1750 W
- 1x Auxiliary burner: 1000 W

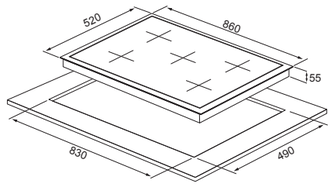

GLASS BUILT-IN **HOBS**

75 cm | 11200W Power

CS5365B01

- 5 Gas Burners (1 WOK Burner)
- Enamel pan supports and burner caps
- Underknob auto-ignition
- Front mechanical control
- 1x WOK burner: 3800 W
- 1 x Rapid burner: 2900 W
- 2 x Semi-rapid burner: 1750 W
- 1 x Auxiliary burner: 1000 W

75 cm | 11200W Power

CS5365W01

- 5 Gas Burners (1 WOK Burner)
- Enamel pan supports and burner caps
- Underknob auto-ignition
- Front mechanical control
- 1x WOK burner: 3800 W
- 1 x Rapid burner: 2900 W
- 2 x Semi-rapid burner: 1750 W
- 1 x Auxiliary burner: 1000 W

30 cm | 4650W power

CS5410B01

- 2 Gas Burners
- Cast iron pan supports and burner caps
- Underknob auto-ignition
- Front mechanical control
- Safety Device
- 1 x Rapid burner: 2900 W
- 1 x Semi-rapid burner: 1750 W

30 cm | 3800W Power

CS5411B01

- 1 Gas Burners
- Cast iron pan supports and burner caps
- Underknob auto-ignition
- Front mechanical control
- Safety Device
- 1 x Wok burner: 3800 W

60 cm | 7400W Power

CS5349B01

- 4 Gas Burners
- Enamel pan supports and burner caps
- Underknob auto-ignition
- Side mechanical control
- Safety Device
- 1 x Rapid burner: 2900 W
- 2 x Semi-rapid burner: 1750 W
- 1 x Auxiliary burner: 1000 W

60 cm | 7400W Power

CS5349W01

- 4 Gas Burners
- Enamel pan supports and burner caps
- Underknob auto-ignition
- YENİ
- Safety Device
- 1 x Rapid burner: 2900 W
- 2 x Semi-rapid burner: 1750 W
- 1 x Auxiliary burner: 1000 W

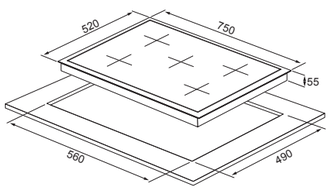

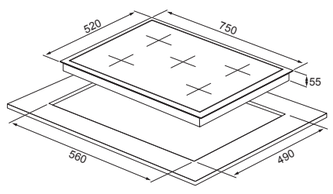

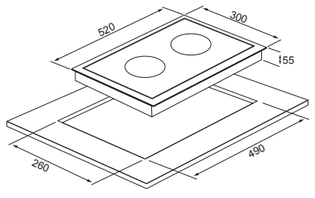

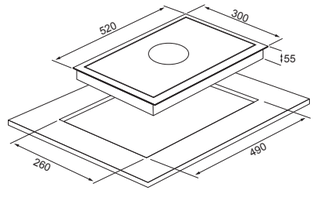

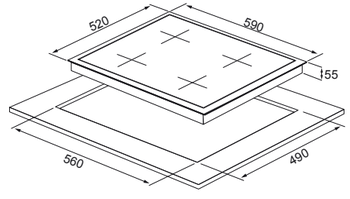

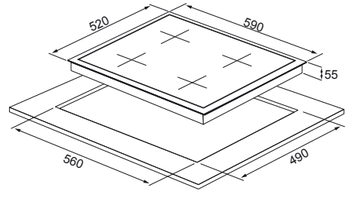

GLASS BUILT-IN **HOBS**

60 cm | 7400W Power

CS5404B01

- 4 Gas Burners
- Cast iron pan supports and burner caps
- Underknob auto-ignition
- Front mechanical control
- Safety Device
- 1 x Rapid burner: 2900 W
- 2 x Semi-rapid burner: 1750 W
- 1 x Auxiliary burner: 1000 W

60 cm | 7400W Power

CS5404W01

- 4 Gas Burners
- Cast iron pan supports and burner caps
- Underknob auto-ignition
- Front mechanical control
- Safety Device
- 1 x Rapid burner: 2900 W
- 2 x Semi-rapid burner: 1750 W
- 1 x Auxiliary burner: 1000 W

75 cm | 11200W Power

CS5405B01

- 5 Gas Burners (1 WOK Burner)
- Cast iron pan supports and burner caps
- Underknob auto-ignition
- Front mechanical control
- Safety Device
- 1 x WOK Burner : 3800 W
- 1 x Rapid burner: 2900 W
- 2 x Semi-rapid burner: 1750 W
- 1 x Auxiliary burner: 1000 W

75 cm | 11200W Power

CS5405W01

- 5 Gas Burners (1 WOK Burner)
- Cast iron pan supports and burner caps
- Underknob auto-ignition
- Front mechanical control
- Safety Device
- 1 x WOK Burner : 3800 W
- 1 x Rapid burner: 2900 W
- 2 x Semi-rapid burner: 1750 W
- 1 x Auxiliary burner: 1000 W

90 cm | 11200W Power

CS5406B01

- 5 Gas Burners (1 WOK Burner)
- Cast iron pan supports and burner caps
- Underknob auto-ignition
- Front mechanical control
- Safety Device
- 1 x WOK Burner : 3800 W
- 1 x Rapid burner: 2900 W
- 2 x Semi-rapid burner: 1750 W
- 1 x Auxiliary burner: 1000 W

90 cm | 11200W Power

CS5406W01

- 5 Gas Burners (1 WOK Burner)
- Cast iron pan supports and burner caps
- Underknob auto-ignition
- Front mechanical control
- Safety Device
- 1 x WOK Burner : 3800 W
- 1 x Rapid burner: 2900 W
- 2 x Semi-rapid burner: 1750 W
- 1 x Auxiliary burner: 1000 W

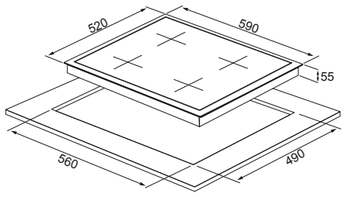

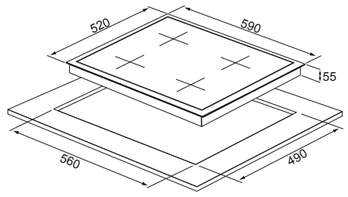

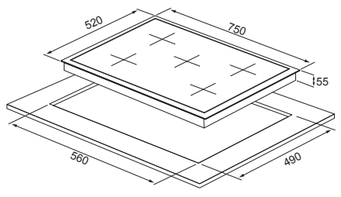

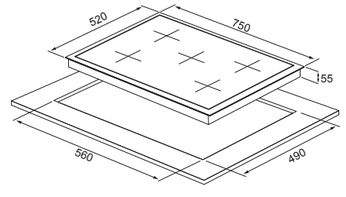

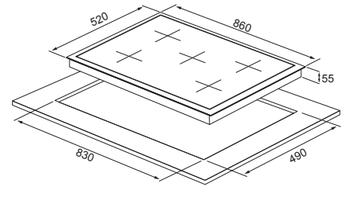

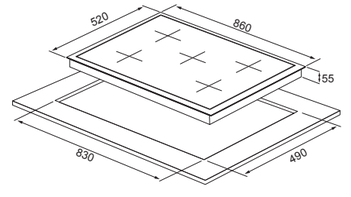

MYFLAME HOBS

60 cm | Power 7400W

CS5427B01

- 4 Gas Burners
- 9-level flame control
- Cast iron pan supports and burner caps
- Underknob auto-ignition
- Front mechanical control
- Safety Device
- 1 x Rapid burner: 2900 W
- 2 x Semi-rapid burner: 1750 W
- 1 x Auxiliary burner: 1000 W

75 cm | Power 11200W

CS5426B01

- 5 Gas Burners(1WOK)
- 9-level flame control
- Cast iron pan supports and burner caps
- Underknob auto-ignition
- Front mechanical control
- Safety Device
- 1 x Rapid burner: 2900 W
- 2 x Semi-rapid burner: 1750 W
- 1 x Auxiliary burner: 1000 W
- 1 x WOK burner : 3800W

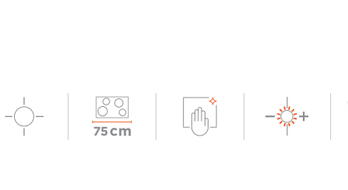

60 cm | Power 7400W

CS5438B01

- 4 Gas Burners
- 9-level flame control
- Cast iron pan supports and burner caps
- Underknob auto-ignition
- Front mechanical control
- Safety Device
- 1 x Rapid burner: 2900 W
- 2 x Semi-rapid burner: 1750 W
- 1 x Auxiliary burner: 1000 W

75 cm | Power 11200W

CS5439B01

- 5 Gas Burners(1WOK)
- 9-level flame control
- Cast iron pan supports and burner caps
- Underknob auto-ignition
- Front mechanical control
- Safety Device
- 1 x Rapid burner: 2900 W
- 2 x Semi-rapid burner: 1750 W
- 1 x Auxiliary burner: 1000 W
- 1 x WOK burner : 3800W

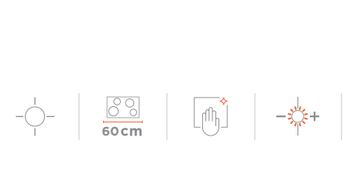

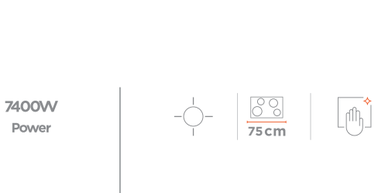

STAINLESS STEEL **HOBS**

60 cm | 7200W Power

AS5378X01

- 4 gas burners
- Enamel pan supports and burner caps
- Underknob auto-ignition
- Side control
- 1 x Rapid burner: 2800 W
- 2 x Semi-rapid burner: 1700 W
- 1 x Auxiliary burner: 1000 W

60 cm | 7000W Power

AS5379X01

- 3 gas burners + 1 electric hot plate
- Enamel pan supports and burner caps
- Underknob auto-ignition
- Side control
- 1 x Rapid burner: 2800 W
- 1 x Semi-rapid burner: 1700 W
- 1 x Auxiliary burner: 1000 W
- 1x Hot plate Ø 145: 1500 W

60 cm | 7200W Power

AS5408X01

- 4 gas burners
- Enamel pan supports and burner caps
- Underknob auto-ignition
- Front control
- 1 x Rapid burner: 2800 W
- 2 x Semi-rapid burner: 1700 W
- 1 x Auxiliary burner: 1000 W

60 cm | 7200W Power

AS5380X01

- 4 gas burners
- Cast iron pan supports and burner caps
- Underknob auto-ignition
- Front control
- 1 x Rapid burner: 2800 W
- 2 x Semi-rapid burner: 1700 W
- 1 x Auxiliary burner: 1000 W

60 cm | 7200W Power

AS5381X01

- 4 gas burners (1 WOK burner)
- Cast iron pan supports and burner caps
- Underknob auto-ignition
- Front control
- 1 x Wok burner: 2500 W
- 2 x Semi-rapid burner: 1700 W
- 1 x Auxiliary burner: 1000 W

70 cm | 10300W Power

AS5409X01

- 5 gas burners (1 WOK burner)
- Enamel pan supports and burner caps
- Underknob auto-ignition
- Front control
- 1 x Rapid burner: 2800 W
- 2 x Semi-rapid burner: 1700 W
- 1 x Auxiliary burner: 1000 W
- 1 x WOK : 3100W

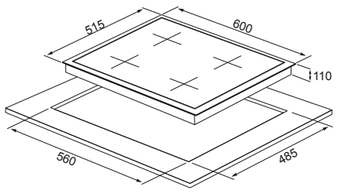

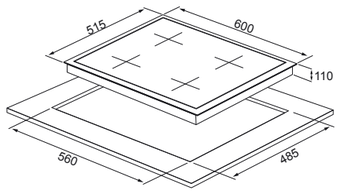

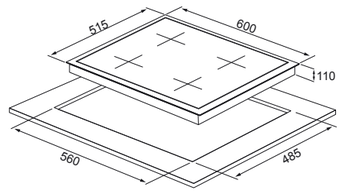

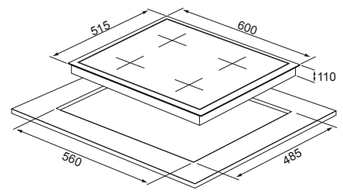

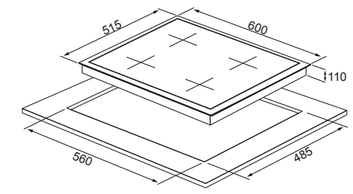

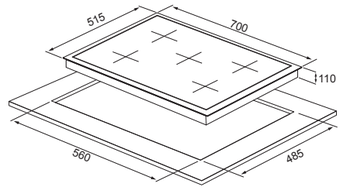

STAINLESS STEEL **HOBS**

70 cm | 10300W Power

AS5382X01

- 5 gas burners (1 WOK burner)
- Cast iron pan supports and burner caps
- Underknob auto-ignition
- Front control
- 1 x Rapid burner: 2800 W
- 2 x Semi-rapid burner: 1700 W
- 1 x Auxiliary burner: 1000 W
- 1 x WOK : 3100W

30 cm | 4000W Power

AS5283

- 2 gas burners
- Cast iron pan supports
- Underknob auto-ignition
- Front control
- 1 x Rapid burner: 3000 W
- 1 x Auxiliary burner: 1000 W

30 cm | 4000W Power

AS5287

- 2 gas burners
- Enamel pan supports
- Underknob auto-ignition
- Front control
- 1 x Rapid burner: 3000 W
- 1 x Auxiliary burner: 1000 W

60 cm | 6000W Power

AS5005

- 4 Hot Plates
- Hot Plates Side Control by 6 position switch
- Power on indicator
- Power Supply Cord (OPTIONAL)
- ø 145 mm/1500 W (rapid)
- ø 180 mm/2000 W (rapid)

30 cm | 3500W Power

AS5255

- 2 Hot Plates
- Hot Plates Front Control by 6 Position Switch
- Power on indicator
- Power Supply Cord (OPTIONAL)
- ø 145 mm/1500 W (rapid)
- ø 180 mm/2000 W (rapid)

60 cm | 7500W Power

AS5330B01

- Black Enameled Built-In Hob
- 4 gas burners
- Cast Iron pan supports
- Under knob auto-ignition
- Side control
- With Flame Failure Device
- 1 x Rapid burner: 3000 W
- 2 x Semi-rapid burner: 1750 W
- 1 x Auxiliary burner: 1000 W

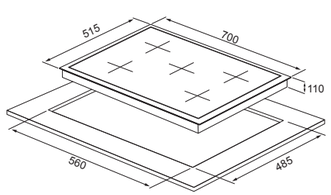

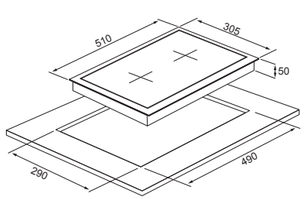

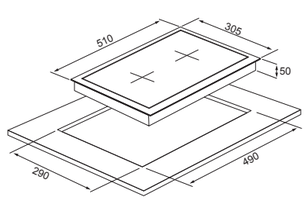

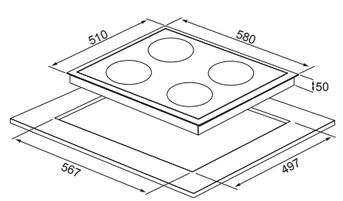

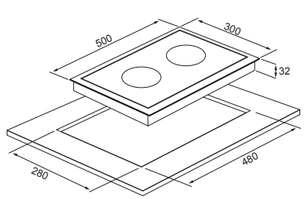

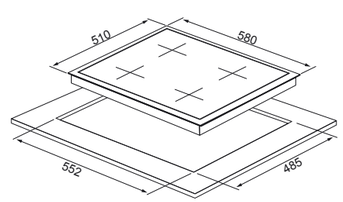

STAINLESS STEEL **HOBS**

90 cm

10300W
Power

AS5383X01

Stainless Steel Built-In Hob

- 5 gas burners (1 WOK burner)
- Cast iron pan supports and burner caps
- Underknob auto-ignition
- Front control
- 1 x Rapid burner: 2800 W
- 2 x Semi-rapid burner: 1700 W
- 1 x Auxiliary burner: 1000 W
- 1 x WOK : 3100W

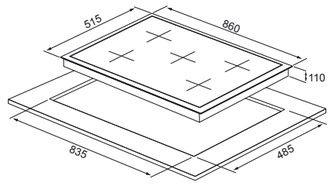

FREESTANDING **HOBS**

60 cm | 7400W Power

FS5425B01

- 4 Gas Burners
- Enamel pan supports and burner caps
- Underknob auto-ignition
- Side mechanical control
- Safety Device
- 1 x Rapid burner: 2900 W
- 2 x Semi-rapid burner: 1750 W
- 1 x Auxiliary burner: 1000 W

60 cm | 7400W Power

FS5425W01

- 4 Gas Burners
- Enamel pan supports and burner caps
- Underknob auto-ignition
- Side mechanical control
- Safety Device
- 1 x Rapid burner: 2900 W
- 2 x Semi-rapid burner: 1750 W
- 1 x Auxiliary burner: 1000 W

60 cm | 7400W Power

FS5425S01

- 4 Gas Burners
- Enamel pan supports and burner caps
- Underknob auto-ignition
- Side mechanical control
- Safety Device
- 1 x Rapid burner: 2900 W
- 2 x Semi-rapid burner: 1750 W
- 1 x Auxiliary burner: 1000 W

HOODS

High performance is achieved through smart technologies and strong design. As we spend a great deal of our time there, who doesn’t want a clean and aesthetic kitchen?

we manage extraction in many ways

Silverline hoods provide you with a fume-free and fresh kitchen thanks to their unique design and different extraction systems for all types of kitchens.

SILENCE

You can cook in peace in your kitchen with the noise level reduced down to 34 dB thanks to this feature.

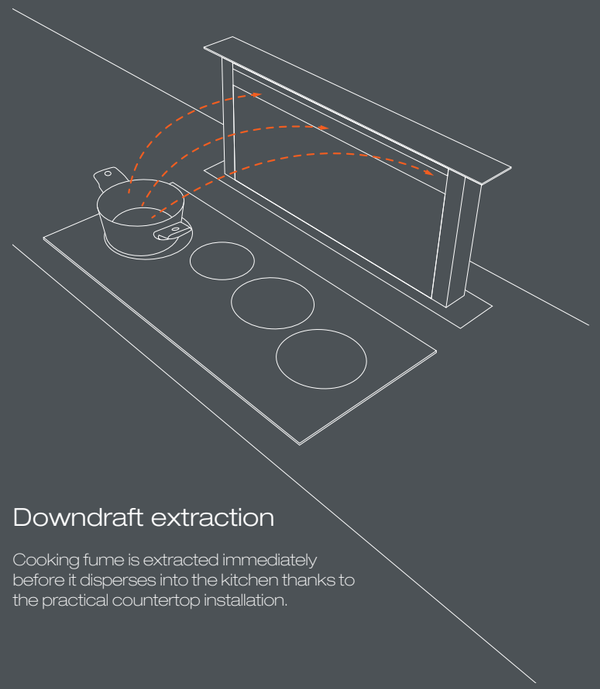

Downdraft extraction

Cooking fume is extracted immediately before it disperses into the kitchen thanks to the practical countertop installation.

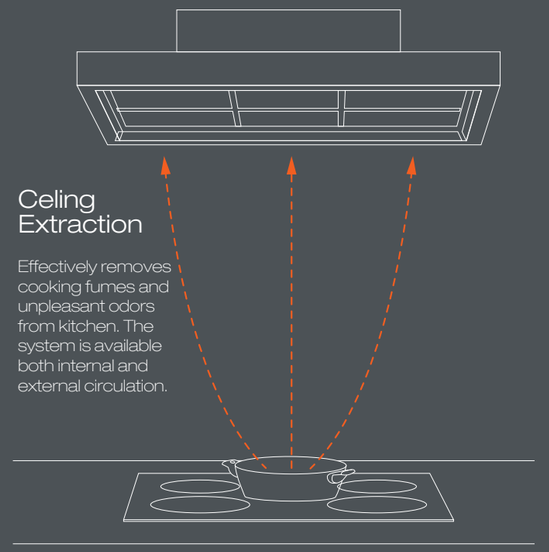

Celing Extraction

Effectively removes cooking fumes and unpleasant odors from kitchen. The system is available both internal and external circulation.

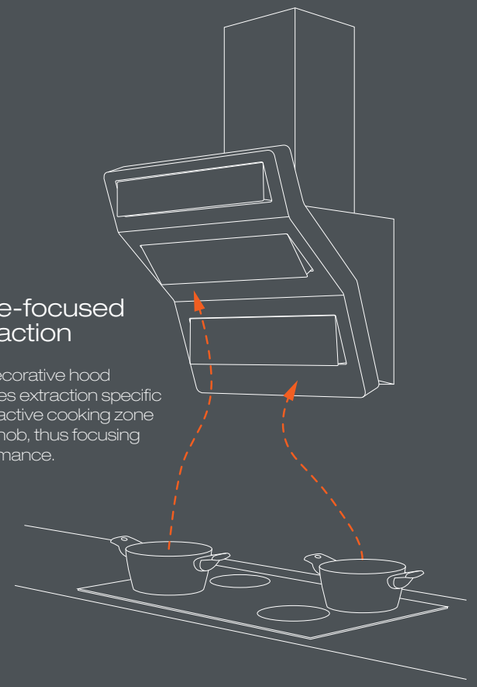

Zone-focused extraction

The decorative hood provides extraction specific to the active cooking zone of the hob, thus focusing performance.

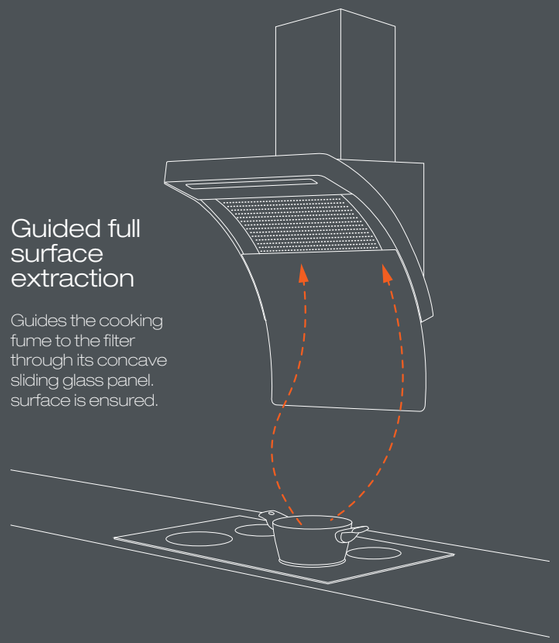

Guided full surface extraction

Guides the cooking fume to the filter through its concave sliding glass panel. surface is ensured.

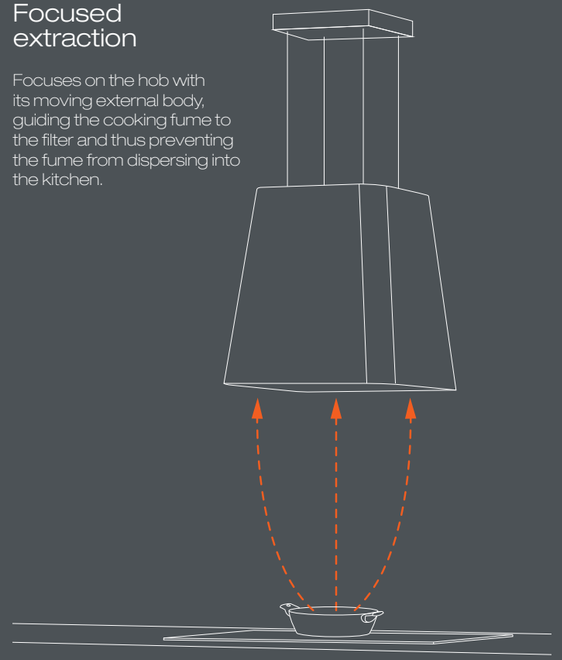

Focused extraction

Focuses on the hob with its moving external body, guiding the cooking fume to the filter and thus preventing the fume from dispersing into the kitchen.

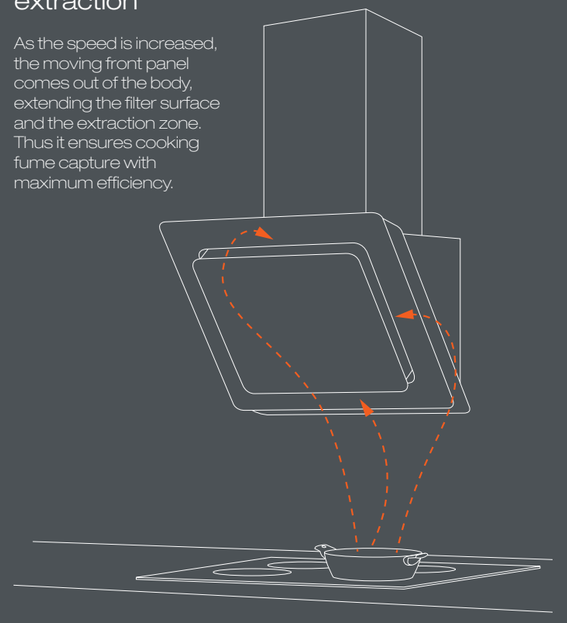

Extendable split extraction

As the speed is increased, the moving front panel comes out of the body, extending the filter surface and the extraction zone. Thus it ensures cooking fume capture with maximum efficiency.

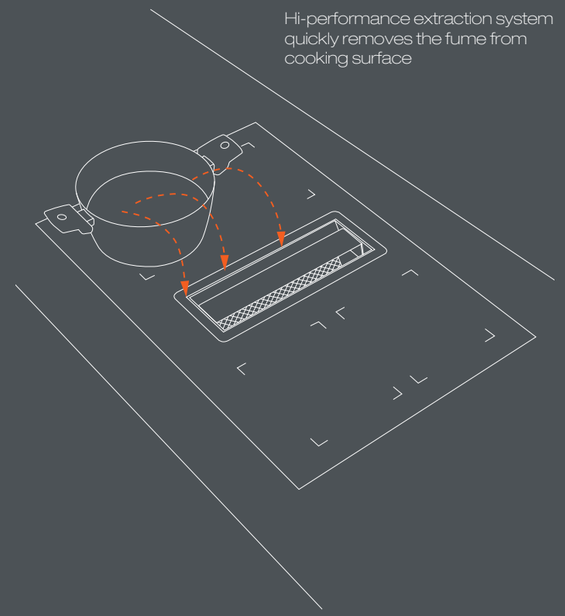

Integrated extraction

Hi-performance extraction system quickly removes the fume from cooking surface

ENERGY CLASS

A+++ | A++ | A+ | A | B | C | D

45cm

HOB DISTANCE (ELECTRIC)

The distance between electric hob and hood.

65cm

HOB DISTANCE (GAS)

The distance between gas hob and hood.

CARBON FILTER

It makes sure your kitchen is kept odour-free. The filter filtrates vapours and grease created by cooking.

REMOTE CONTROL

Control with a functional remote controller.

APP CONTROL

Control with IOS and/or Android applications.

SILVER CONNECT

Automatic adjustment of the hood speed according to the air flow by the cooker with Bluetooth.

EASY INSTALLATION

Easy installation of hoods via spending less time and energy

75 kg

WEIGHT

The weight of hood.

LIGHTING (STANDARD)

The halogen lamp has high efficiency, quality of light, and high rated life.

LED LIGHTING

Provides higher brightness with lower energy.

LED STRIPE LIGHTING

Provides flexibility and color options which make it perfectly suited for many lighting applications.

RGB LED LIGHTING

The color of the light is adjusted with the remote control.

TUNABLE LED LIGHTING

Temperature value of white color.

AUTOMATIC SENSORS

Automatic control for the functions.

CUSTOMISATION

Provides panel options according to the customer's preference.

HI SERIES

Guarantees brilliant cooking experience and fresh air by Hi technologies.

WORKTOP **HOODS**

The integrated hood in hob extracts unpleasant odors and steam emitted during cooking directly from the source. This ensures continued clean air flow in the kitchen.

WORKTOP HOODS

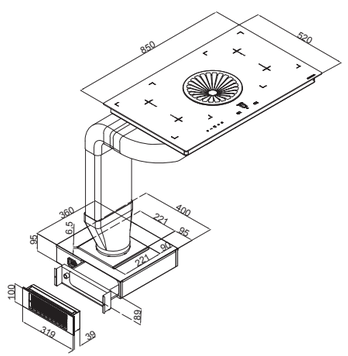

3412 SUPREME

Technical Data

Category	Worktop Hoods
Size	85cm
Duct Out Version	Intern (Duct Out / Recirclation)
Finish	Aluminium + Tempered Glass

Performance Data

Max Flow Rate	648 m³/h
Max Noise Level	59 dB(A)
Total Absorbation	150W
Filter	Stainless Steel Casette Filter + Active Carbon Filter
Control	4S Touch Control
Lighting	/
Duct Size	220x89mm

Color

Black White

Grill Color

Natural Al Black Bright Gold

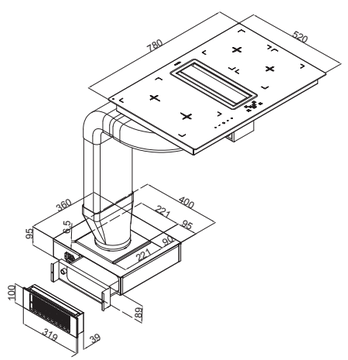

3413 FLOW-IN

Technical Data

Category	Worktop Hoods
Size	78cm
Duct Out Version	Intern (Duct Out / Recirclation)
Finish	Inox + Tempered Glass

Performance Data

Max Flow Rate	648 m³/h
Max Noise Level	71 dB(A)
Total Absorbation	150W
Filter	Stainless Steel Casette Filter + Active Carbon Filter
Control	4S Touch Control
Lighting	/
Duct Size	220x89mm

Color

Black White

WORKTOP **HOODS**

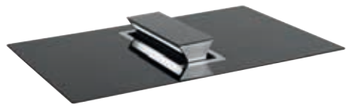

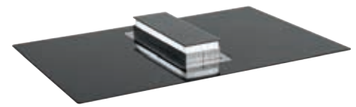

3414 CAPTURE

Technical Data

Category	Worktop Hoods
Size	78cm
Duct Out Version	Intern (Duct Out / Recirclation)
Finish	Inox + Tempered Glass

Performance Data

Max Flow Rate	606 m³/h
Max Noise Level	71 dB(A)
Total Absorbation	158W
Filter	Stainless Steel Casette Filter + Active Carbon Filter
Control	4S Touch Control
Lighting	1x8W Led Stripe
Duct Size	220x89mm

Color

Black

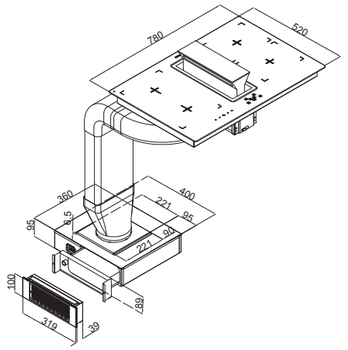

3415 OVERALL

Technical Data

Category	Worktop Hoods
Size	78cm
Duct Out Version	Intern (Duct Out / Recirclation)
Finish	Inox + Tempered Glass

Performance Data

Max Flow Rate	553 m³/h
Max Noise Level	70 dB(A)
Total Absorbation	162W
Filter	Stainless Steel Casette Filter + Active Carbon Filter
Control	4S Touch Control
Lighting	1x12W Led Stripe
Duct Size	220x89mm

Color

Black

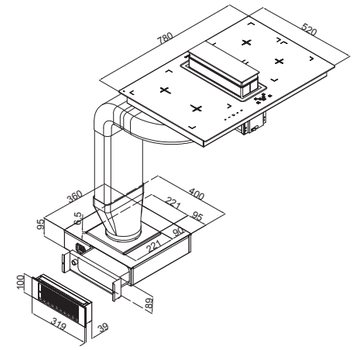

WORKTOP HOODS

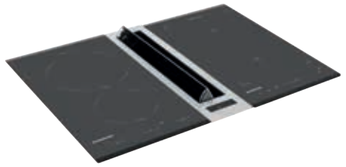

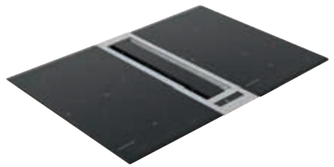

3416 FREE FLOW

Technical Data

Category	Worktop Hoods
Size	40cm
Duct Out Version	Intern (Duct Out / Recirclation)
Finish	Inox

Performance Data

Max Flow Rate:	723 m³/h
Max Noise Level:	66 dB(A)
Total Absorbation:	150W
Filter	Stainless Steel Casette Filter + Active Carbon Filter
Control	3S+1B Touch Control
Lighting	/
Duct Size	220x89mm

Color

Inox

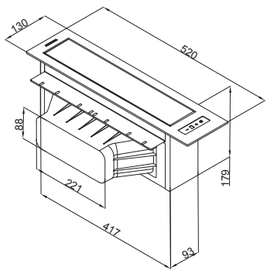

3417 DOUBLE FLOW

Technical Data

Category	Worktop Hoods
Size	40cm
Duct Out Version	Intern (Duct Out / Recirclation)
Finish	Inox + Tempered Glass

Performance Data

Max Flow Rate:	577 m³/h
Max Noise Level:	71 dB(A)
Total Absorbation:	150W
Filter	Stainless Steel Casette Filter + Active Carbon Filter
Control	4S Touch Control
Lighting	/
Duct Size	220x89mm

Color

Inox

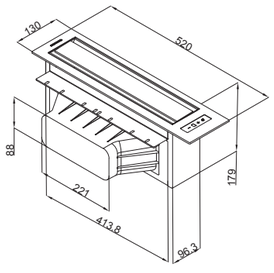

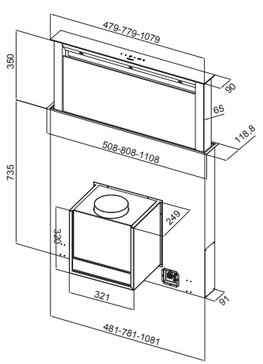

3410 DOWNDRAFT

Technical Data

Category	Worktop Hoods
Size	60 - 90 - 120cm
Duct Out Version	Intern (Duct Out / Recirclation)
Finish	Inox + Tempered Glass

Performance Data

Max Flow Rate:	813 m³/h
Max Noise Level:	62 dB(A)
Total Absorbation:	282W
Filter	Stainless Steel Casette Filter + Active Carbon Filter
Control	3S+1B Touch Control
Lighting	4x1,1W Power LED
Duct Size	150mm

Color

Black

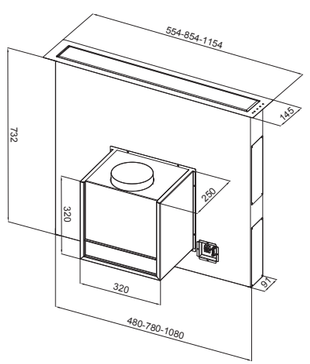

3411

Technical Data

Category	Worktop Hoods
Size	60 - 90 - 120cm
Duct Out Version	Intern (Duct Out / Recirclation)
Finish	Inox

Performance Data

Max Flow Rate:	719 m³/h
Max Noise Level:	63 dB(A)
Total Absorbation:	275W
Filter	Stainless Steel Casette Filter + Active Carbon Filter
Control	3S+1B Soft Touch with Display
Lighting	/
Duct Size	150mm

Color

Inox

SUSPENDED HOODS

Silverline's ergonomic designed suspended hoods offer you larger areas, making our lives easier.

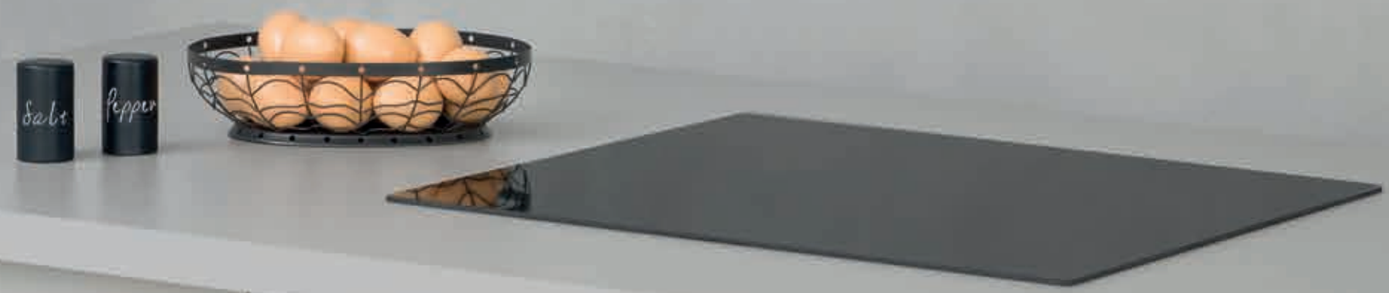

4386 PURE PLUS

Technical Data

Category	Suspended Hoods
Size	50cm
Duct Out Version	Intern (Recirclation)
Finish	Inox + Tempered Glass

Performance Data

Max Flow Rate:	765 m³/h
Max Noise Level:	64 dB(A)
Total Absorbation:	280W
Filter	Stainless Steel Casette Filter + Carbon Filter
Control	2S+1B Touch Control
Lighting	2x2,5W D-LED
Duct Size	/

Color

Inox Black White Anthrachite Blue

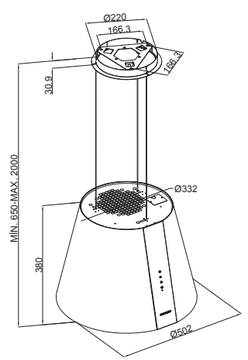

4385 NEAT

Technical Data

Category	Suspended Hoods
Size	50cm
Duct Out Version	Intern (Recirclation)
Finish	Inox + Tempered Glass

Performance Data

Max Flow Rate:	740 m³/h
Max Noise Level:	62 dB(A)
Total Absorbation:	290W
Filter	Stainless Steel Casette Filter + Carbon Filter
Control	3S+1B Touch Control
Lighting	1x15W LED
Duct Size	/

Color

Black White Peach Dew Blossom

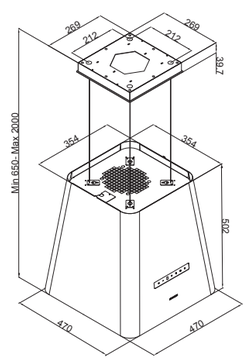

SUSPENDED HOODS

4380 COMET ISOLA

Technical Data

Category	Suspended Hoods
Size	50cm
Duct Out Version	Intern (Recirclation)
Finish	Inox + Tempered Glass

Performance Data

Max Flow Rate:	621 m³/h
Max Noise Level:	70 dB(A)
Total Absorbation:	281W
Filter	Stainless Steel Casette Filter + Charcoal Carbon Filter
Control	4S Soft Touch with Display
Lighting	3x1,1 Power LED
Duct Size	/

Color

Inox

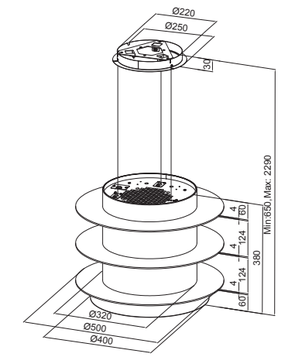

anti-finger inox surface eliminates the problems of fingerprint and dirtiness thanks to the surface coating of advanced technology and offers a quality and long life

A

55cm 65cm 28.5 kg

4203

Technical Data

Category	Island Hoods
Size	90cm
Duct Out Version	Intern (Duct Out / Recirclation)
Finish	Inox + Tempered Glass

Performance Data

Max Flow Rate:	725 m³/h
Max Noise Level:	64 dB(A)
Total Absorbation:	279W
Filter	Aluminium Casette Filter + Optional Carbon Filter
Control	4S+1B Touch Control
Lighting	8x1,1W Power LED
Duct Size	150mm

Color

Inox

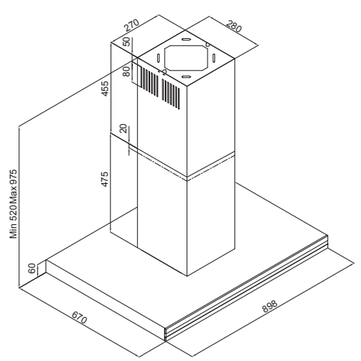

A

55cm 65cm 30.2 kg

4207

Technical Data

Category	Island Hoods
Size	90 - 120cm
Duct Out Version	Intern (Duct Out / Recirclation)
Finish	Inox + Tempered Glass

Performance Data

Max Flow Rate:	738 m³/h
Max Noise Level:	62 dB(A)
Total Absorbation:	274W
Filter	Stainless Steel Casette Filter + Charcoal Carbon Filter
Control	3S+1B Touch Control
Lighting	2x4,5W LED Stripe
Duct Size	150mm

Color

Nero Black

Bianco White

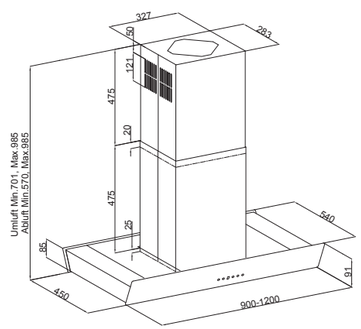

ISLAND HOODS

A

55cm 65cm 24.2 kg

4110

Technical Data

Category	Island Hoods
Size	60 - 90 - 120cm
Duct Out Version	Intern (Duct Out / Recirclation)
Finish	Inox

Performance Data

Max Flow Rate:	765 m³/h
Max Noise Level:	62 dB(A)
Total Absorbation:	278W
Filter	Aluminium Casette Filter + Optional Carbon Filter
Control	3S+1B Soft Touch with Display
Lighting	2x1,5W G4 LED
Duct Size	150mm

Color

Inox Black

A

55cm 65cm 24.6kg

4140

Technical Data

Category	Island Hoods
Size	60 - 90cm
Duct Out Version	Intern (Duct Out / Recirclation)
Finish	Inox + Tempered Glass

Performance Data

Max Flow Rate:	750 m³/h
Max Noise Level:	65 dB(A)
Total Absorbation:	278W
Filter	Aluminium Casette Filter + Optional Carbon Filter
Control	3S+1B Soft Touch with LCD
Lighting	2x1,5W G4 LED
Duct Size	150mm

Color

Inox Black

A

55cm 65cm 23 kg

4170

Technical Data

Category	Island Hoods
Size	40cm
Duct Out Version	Intern (Duct Out / Recirclation)
Finish	Inox

Performance Data

Max Flow Rate:	739 m³/h
Max Noise Level:	63 dB(A)
Total Absorbation:	278W
Filter	Aluminium Casette Filter + Optional Carbon Filter
Control	3S+1B Soft Touch with Display
Lighting	2x1,5W G4 LED
Duct Size	150mm

Color

Inox Black White

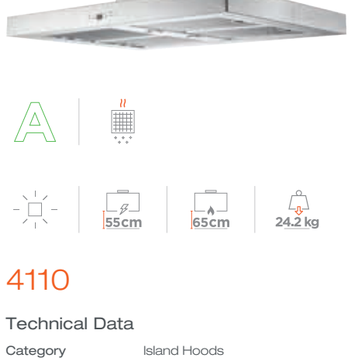

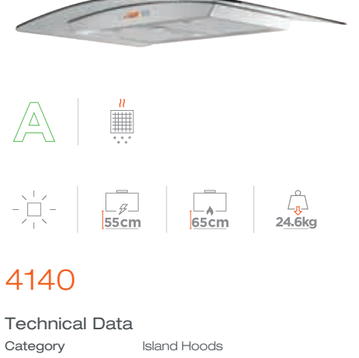

A

55cm 65cm 30 kg

4180

Technical Data

Category	Island Hoods
Size	40cm
Duct Out Version	Intern (Duct Out / Recirclation)
Finish	Inox

Performance Data

Max Flow Rate:	700 m³/h
Max Noise Level:	54 dB(A)
Total Absorbation:	269W
Filter	Aluminium Casette Filter + Optional Carbon Filter
Control	4S+1B Soft Touch with Display
Lighting	2x1,5W G4 LED
Duct Size	150mm

Color

Inox

A

55cm 65cm 27.2 kg

4204

Technical Data

Category	Island Hoods
Size	90cm
Duct Out Version	Intern (Duct Out / Recirclation)
Finish	Inox + Tempered Glass

Performance Data

Max Flow Rate:	752 m³/h
Max Noise Level:	64 dB(A)
Total Absorbation:	279W
Filter	Stainless Steel Casette Filter + Charcoal Carbon Filter
Control	3S+1B Touch Control
Lighting	8x1,1W Power LED
Duct Size	150mm

Color

Inox

A

55cm 65cm 25.6 kg

4250

Technical Data

Category	Island Hoods
Size	60 - 90cm
Duct Out Version	Intern (Duct Out / Recirclation)
Finish	Inox + Tempered Glass

Performance Data

Max Flow Rate:	753 m³/h
Max Noise Level:	66 dB(A)
Total Absorbation:	281W
Filter	Aluminium Casette Filter + Optional Carbon Filter
Control	3S+1B Soft Touch with Display
Lighting	4x1,5W G4 LED
Duct Size	150mm

Color

Inox Black White

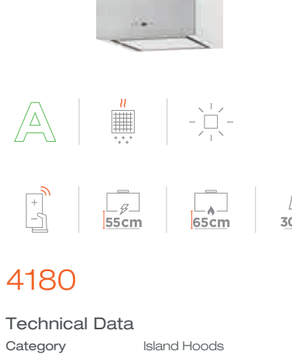

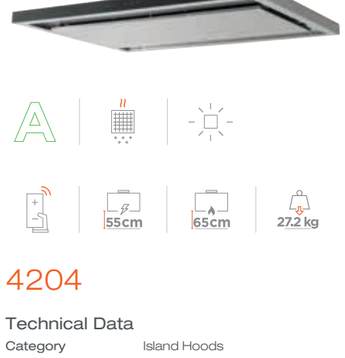

CEILING **HOODS**

Ceiling-mounted extractor hoods by Silverline are designed to meet consumer needs and expectations by combining elegance and functionality with the aim of turning modern kitchens into comfortable living spaces.

4265 SIDELIGHTED

PLUS X AWARD® approved for: High Quality, Design, Ease of Use

Technical Data

Category	Ceiling Hoods
Size	100 - 120cm
Duct Out Version	Extern / Intern (Duct Out / Recirclation)
Finish	Inox + Tempered Glass

Performance Data

Max Flow Rate:	602 m³/h
Max Noise Level:	72 dB(A)
Total Absorbation:	137W
Filter	Stainless Steel Casette Filter + Active Carbon Filter
Control	4S Remote Control
Lighting	1x35W LED Stripe
Duct Size	/

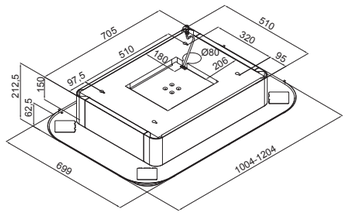

Options

RGB + Tunable White
Tunable White
Silverconnect + Silverwire

Color

Black White

GET IT ON Google Play — Download on the App Store

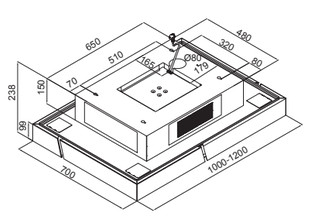

4267 LIGHTBOX

Technical Data

Category	Ceiling Hoods
Size	100 - 120cm
Duct Out Version	Intern (Duct Out/ Recirclation)
Finish	Inox + Tempered Glass

Performance Data

Max Flow Rate:	678 m³/h
Max Noise Level:	73 dB(A)
Total Absorbation:	137W
Filter	Stainless Steel Casette Filter + Active Carbon Filter
Control	3S+1B Remote Control
Lighting	1x35W LED Stripe
Duct Size	/

Options

RGB + Tunable White
Tunable White

Color

Black White

GET IT ON Google Play — Download on the App Store

SLIDE TO HEAVEN

DESIGN AND FUNCTIONALITY TOGETHER

Standing out with its strong lighting function, Slide to Heaven also creates a clear environment with its extraction performance. Its award-winning design is a complementary accessory for modern kitchens.

4266 SLIDE TO HEAVEN

Technical Data

Category	Ceiling Hoods
Size	100 - 120cm
Duct Out Version	Extern / Intern (Duct Out / Recirclation)
Finish	Inox

Performance Data

Max Flow Rate:	590 m³/h
Max Noise Level:	76 dB(A)
Total Absorbation:	134W
Filter	Stainless Steel Casette Filter + Active Carbon Filter
Control	4S Remote Control
Lighting	1x32W LED Stripe
Duct Size	/

Options

Silverconnect + Silverwire

Color

Black White

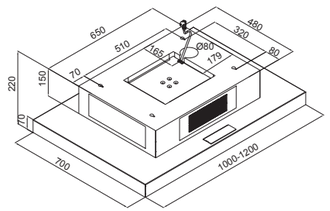

4264 SQUARE BOX

Technical Data

Category	Ceiling Hoods
Size	100 - 120cm
Duct Out Version	Intern (Duct Out / Recirclation)
Finish	Inox + Tempered Glass

Performance Data

Max Flow Rate:	578 m³/h
Max Noise Level:	73 dB(A)
Total Absorbation:	130W
Filter	Stainless Steel Casette Filter + Active Carbon Filter
Control	4S Remote Control
Lighting	1x28W LED Stripe
Duct Size	/

Options

Silverconnect + Silverwire

Color

Black White

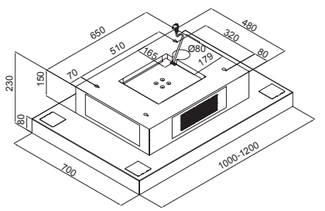

4269 ONE STRIPE

Technical Data

Category	Ceiling Hoods
Size	100 - 120cm
Duct Out Version	Intern (Duct Out / Recirclation)
Finish	Inox + Tempered Glass

Performance Data

Max Flow Rate:	590 m³/h
Max Noise Level:	73 dB(A)
Total Absorbation:	132W
Filter	Stainless Steel Casette Filter + Active Carbon Filter
Control	4S Remote Control
Lighting	1x30W LED Stripe
Duct Size	/

Color

Black White

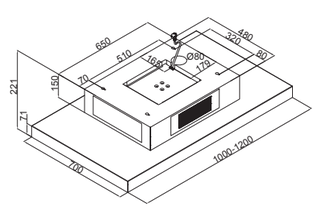

CEILING **HOODS**

38.1 kg

4262 SKYDOOR

Technical Data

Category	Ceiling Hoods
Size	100 - 120cm
Duct Out Version	Extern / Intern (Duct Out Recirclation)
Finish	Inox + Tempered Glass

Performance Data

Max Flow Rate:	649 m³/h
Max Noise Level:	68 dB(A)
Total Absorbation:	137W
Filter	Stainless Steel Casette Filter + Active Carbon Filter
Control	4S Remote Control
Lighting	1x50W LED Stripe
Duct Size	/

Options

Silverconnect + Silverwire

Color

White

Pattern

Naturel White | Optic Water | Optic Sky | Optic City | Optic Wood

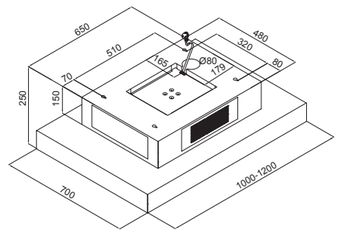

CEILING HOODS

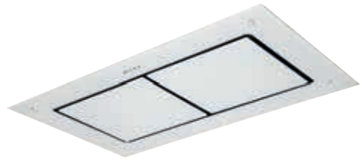

A | 26.6 kg

4260 NIGHT

Technical Data

Category	Ceiling Hoods
Size	90 - 120cm
Duct Out Version	Extern / Intern (Duct Out Recirclation)
Finish	Tempered Glass

Performance Data

Max Flow Rate:	758 m³/h
Max Noise Level:	62 dB(A)
Total Absorbation:	290W
Filter	Aluminium Casette Filter + Optional Carbon Filter
Control	3S+1B Remote Control
Lighting	15W Micro LED
Duct Size	150mm

Color

Black White

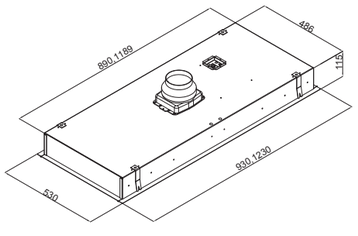

A | 18.8 kg

4229

Technical Data

Category	Ceiling Hoods
Size	90 - 100 - 120cm
Duct Out Version	Extern / Intern (Duct Out Recirclation)
Finish	Tempered Glass

Performance Data

Max Flow Rate:	773 m³/h
Max Noise Level:	61 dB(A)
Total Absorbation:	286W
Filter	Aluminium Casette Filter + Optional Carbon Filter
Control	3S+1B Remote Control
Lighting	3x3,5W LED
Duct Size	150mm

Color

Black White

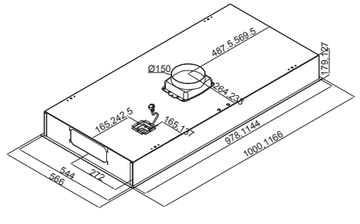

C | 21.5 kg

4227 ROOF

Technical Data

Category	Ceiling Hoods
Size	100 - 120cm
Duct Out Version	Extern
Finish	Tempered Glass

Performance Data

Max Flow Rate:	786 m³/h
Max Noise Level:	60 dB(A)
Total Absorbation:	/
Filter	Aluminium Casette Filter
Control	2S+2B Remote Control
Lighting	/
Duct Size	/

Color

Inox Black White

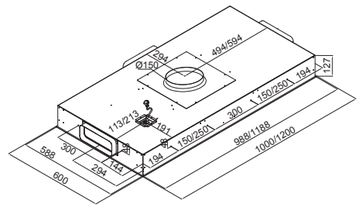

A | 38.5 kg

4226

Technical Data

Category	Ceiling Hoods
Size	100 - 120cm
Duct Out Version	Intern (Duct Out / Recirclation)
Finish	Tempered Glass

Performance Data

Max Flow Rate:	785 m³/h
Max Noise Level:	64 dB(A)
Total Absorbation:	288W
Filter	Stainless Steel Casette Filter + Charcoal Carbon Filter
Control	3S+1B Remote Control
Lighting	4x3W LED
Duct Size	150mm

Color

Black White

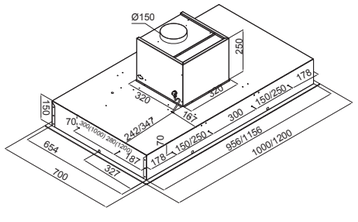

A | 29.8 kg

4225

Technical Data

Category	Ceiling Hoods
Size	100 - 120cm
Duct Out Version	Intern (Duct Out / Recirclation)
Finish	Inox + Tempered Glass

Performance Data

Max Flow Rate:	753 m³/h
Max Noise Level:	59 dB(A)
Total Absorbation:	295W
Filter	Stainless Steel Casette Filter + Charcoal Carbon Filter
Control	3S+1B Remote Control
Lighting	6x3W LED
Duct Size	150mm

Color

Inox Inox+ Black Inox+ White

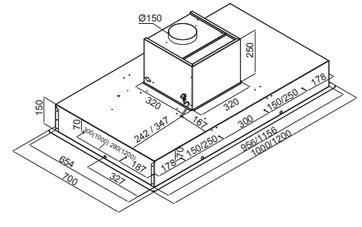

D | 36.1 kg

4224

Technical Data

Category	Ceiling Hoods
Size	100 - 120cm
Duct Out Version	Extern / Intern (Duct Out Recirclation)
Finish	Inox + Tempered Glass

Performance Data

Max Flow Rate:	679 m³/h
Max Noise Level:	60 dB(A)
Total Absorbation:	338W
Filter	Stainless Steel Casette Filter + Active Carbon Filter
Control	3S+1B Remote Control
Lighting	6x3W LED
Duct Size	/

Color

Inox Inox+ Black Inox+ White

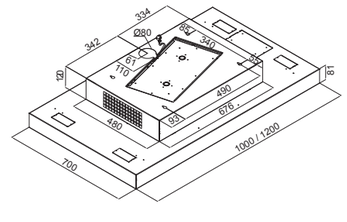

WALL-MOUNTED **HOODS**

Silverline's wall-mounted hoods can serve as a design element in your kitchen, adding a distinctive look to your cook space depending on the product style you choose.

WALL-MOUNTED HOODS

3472 BOLD

Technical Data

Category	Wall Type Hoods
Size	60 - 80 - 90cm
Duct Out Version	Intern (Duct Out / Recirclation)
Finish	Aluminium + Tempered Glass

Performance Data

Max Flow Rate:	628 m³/h
Max Noise Level:	61 dB(A)
Total Absorbation:	285W
Filter	Aluminium Casette Filter + Optional Carbon Filter
Control	3S Touch Control
Lighting	1x10W LED Stripe
Duct Size	150mm

Color

Black White Grey Mink

Grill Color

Natural Al Dark Inox Bright Gold Rose Bronze

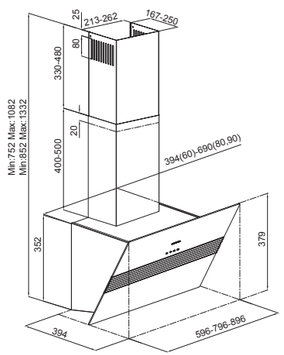

A

55cm 65cm

3433 SLIDE DOWN

Technical Data

Category	Wall Type Hoods
Size	60 - 80cm
Duct Out Version	Intern (Duct Out / Recirclation)
Finish	Inox + Tempered Glass

Performance Data

Max Flow Rate:	742 m³/h
Max Noise Level:	62 dB(A)
Total Absorbation:	176W
Filter	Aluminium Casette Filter + Optional Carbon Filter
Control	3S+1B Touch Control
Lighting	1x10,5W LED Stripe
Duct Size	150mm

Color

Black White

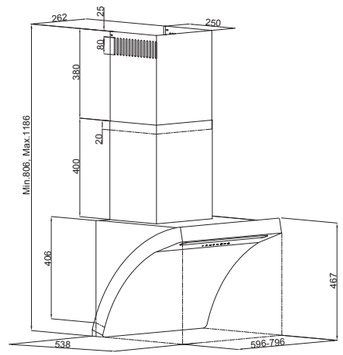

A+

55cm 65cm

Alexa

Pop Out Hi allows you to control the cooker and hood over the touch screen, as well as the voice command feature.

Precise Sensors

You can measures the humidity, heat and quality of air in the environment and manage them online.

Pop Out Hi is able to understand and consider the quality of interior to activate the system if it is necessary.

Media

With its camera, you can shoot photo, share your cook via social media, also you are able to connect to the product to see the environment when you are away.

Chef

With telephone and tablet aplications, you can che-ck and cook for ready made recipes.

Monitoring

Thanks to the IoS & Android based application, you can control all data of the hood with one control unit.

POP OUT hi+

Silverline Hi Series guarantee brilliant cooking experience and fresh air by simply activating and controlling hob and hood. Also the series offer the opportunity to control air quality in the domestic environment, even while away from your home.

the extendable colored filter gradually pops out as the speed is increased and expands the extraction zone, thus ensuring cooking fume capture with maximum efficiency.

illuminates the whole cooking area thanks to the ergonomic lighting.

pop-out

a new dimension in product experience
intuitive interaction through form

WALL-MOUNTED **HOODS**

3431 POP OUT

Technical Data

Category	Wall Type Hoods
Size	60 - 80cm
Duct Out Version	Intern (Duct Out / Recirclation)
Finish	Inox + Tempered Glass

Performance Data

Max Flow Rate:	736 m³/h
Max Noise Level:	62 dB(A)
Total Absorbation:	177W
Filter	Aluminium Casette Filter + Optional Carbon Filter
Control	2S+1B Touch Control
Lighting	1x12W LED Stripe
Duct Size	150mm

Color

Black White

Filter Color

Inox Green Blue Pink Turquoise

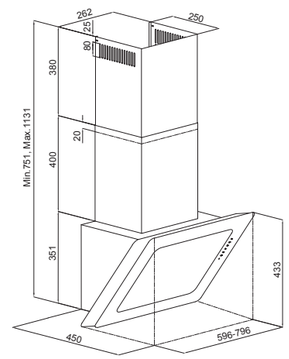

WALL-MOUNTED **HOODS**

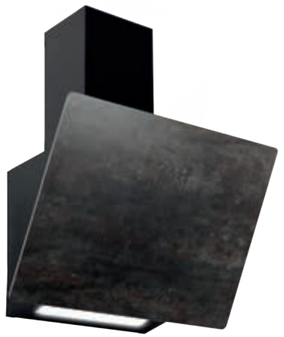

A

55cm 65cm

3474 STRONG

Technical Data

Category	Wall Type Hoods
Size	60 - 80cm
Duct Out Version	Intern (Duct Out / Recirclation)
Finish	Ceracor / Corian

Performance Data

Max Flow Rate:	736 m³/h
Max Noise Level:	59 dB(A)
Total Absorbation:	285W
Filter	Aluminium Casette Filter + Optional Carbon Filter
Control	2S+1B Touch Control
Lighting	1x10W LED Stripe
Duct Size	150mm

Color

Oxido Oil · Polissandro · Mocha Perla · Luxury Cement Grey · Deep Black Quartz · Glacier White

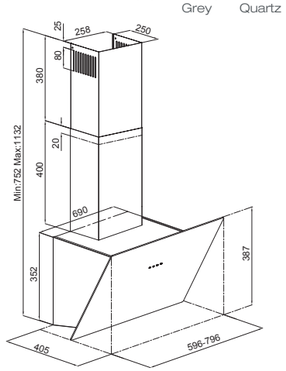

A

55cm 65cm

3457 SOHO

Technical Data

Category	Wall Type Hoods
Size	60 - 80 - 90cm
Duct Out Version	Intern (Duct Out / Recirclation)
Finish	Tempered Glass

Performance Data

Max Flow Rate:	628 m³/h
Max Noise Level:	61 dB(A)
Total Absorbation:	285W
Filter	Aluminium Casette Filter + Optional Carbon Filter
Control	3S Touch Control
Lighting	1x10W LED Stripe
Duct Size	150mm

Color

Black · White · Grey · Mink

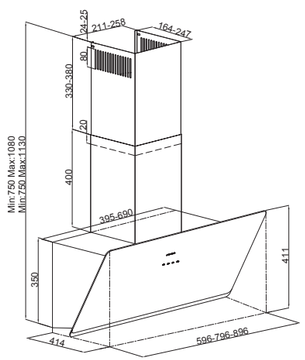

A

55cm 65cm

3457

Technical Data

Category	Wall Type Hoods
Size	60 - 80 - 90cm
Duct Out Version	Intern (Duct Out / Recirclation)
Finish	Inox + Tempered Glass

Performance Data

Max Flow Rate:	661 m³/h
Max Noise Level:	55 dB(A)
Total Absorbation:	216W
Filter	Aluminium Casette Filter + Optional Carbon Filter
Control	2S+1B Touch Control
Lighting	2x3W LED
Duct Size	150mm

Color

Inox+ Black · Inox+ White

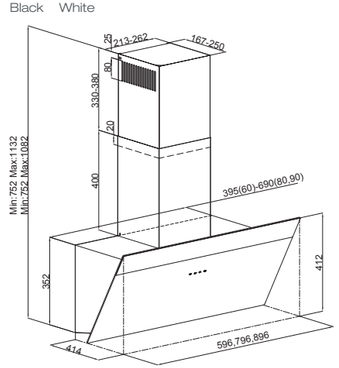

A

55cm 65cm

3455

Technical Data

Category	Wall Type Hoods
Size	60 - 80 - 90cm
Duct Out Version	Intern (Duct Out / Recirclation)
Finish	Inox + Tempered Glass

Performance Data

Max Flow Rate:	670 m³/h
Max Noise Level:	56 dB(A)
Total Absorbation:	216W
Filter	Aluminium Casette Filter + Optional Carbon Filter
Control	2S+1B Touch Control
Lighting	2x3W LED
Duct Size	150mm

Color

Inox+ Black

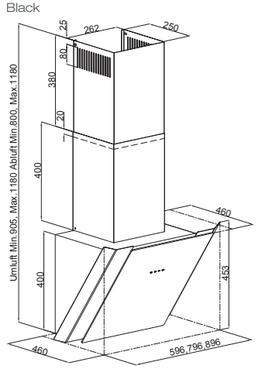

A

55cm 65cm

3454

Technical Data

Category	Wall Type Hoods
Size	60 - 80 - 90cm
Duct Out Version	Intern (Duct Out / Recirclation)
Finish	Inox

Performance Data

Max Flow Rate:	647 m³/h
Max Noise Level:	65 dB(A)
Total Absorbation:	216W
Filter	Aluminium Casette Filter + Optional Carbon Filter
Control	3S Touch Control
Lighting	2x3W LED
Duct Size	150mm

Color

Black

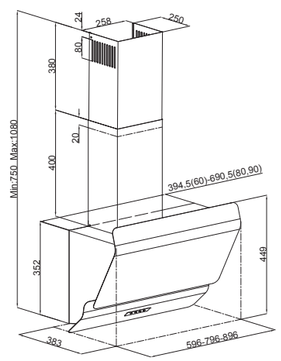

A

55cm 65cm

3450

Technical Data

Category	Wall Type Hoods
Size	60 - 90cm
Duct Out Version	Intern (Duct Out / Recirclation)
Finish	Inox + Tempered Glass

Performance Data

Max Flow Rate:	628 m³/h
Max Noise Level:	65 dB(A)
Total Absorbation:	216W
Filter	Aluminium Casette Filter + Optional Carbon Filter
Control	3S Touch Control
Lighting	2x3W LED
Duct Size	150mm

Color

Inox+ Black · Inox+ White

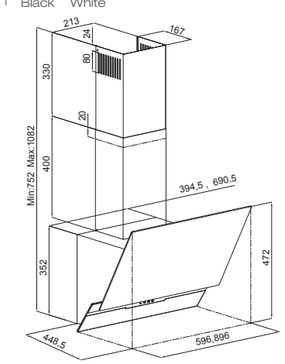

WALL-MOUNTED **HOODS**

A

55cm 65cm

3445

Technical Data

Category	Wall Type Hoods
Size	60 - 80 - 90cm
Duct Out Version	Intern (Duct Out / Recirclation)
Finish	Inox + Tempered Glass

Performance Data

Max Flow Rate:	654 m³/h
Max Noise Level:	61 dB(A)
Total Absorbation:	225W
Filter	Aluminium Casette Filter + Optional Carbon Filter
Control	2S+1B Touch Control
Lighting	1x15W LED Stripe
Duct Size	150mm

Color

Black White Mink

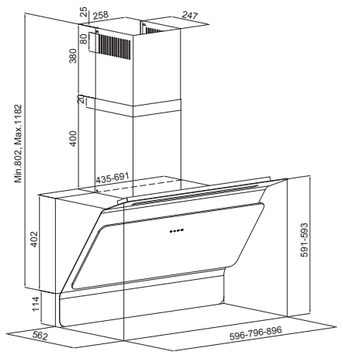

A

55cm 65cm

3444

Technical Data

Category	Wall Type Hoods
Size	60 - 80 - 90cm
Duct Out Version	Intern (Duct Out / Recirclation)
Finish	Inox + Tempered Glass

Performance Data

Max Flow Rate:	660 m³/h
Max Noise Level:	57 dB(A)
Total Absorbation:	216W
Filter	Aluminium Casette Filter + Optional Carbon Filter
Control	2S+1B Touch Control
Lighting	2x3W LED
Duct Size	150mm

Color

Black White Black+ Inox

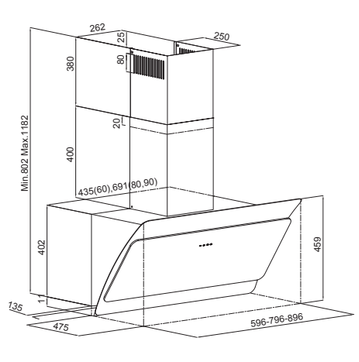

A+

55cm 65cm

3429

Technical Data

Category	Wall Type Hoods
Size	60 - 80 - 90cm
Duct Out Version	Intern (Duct Out / Recirclation)
Finish	Inox + Tempered Glass

Performance Data

Max Flow Rate:	773 m³/h
Max Noise Level:	62 dB(A)
Total Absorbation:	281W
Filter	Aluminium Casette Filter + Optional Carbon Filter
Control	2S+1B Touch Control
Lighting	2x3W LED
Duct Size	150mm

Color

Black White

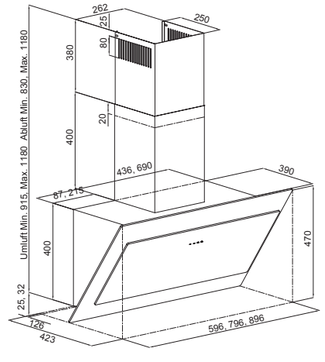

A

55cm 65cm

3424

Technical Data

Category	Wall Type Hoods
Size	60 - 80 - 90cm
Duct Out Version	Intern (Duct Out / Recirclation)
Finish	Tempered Glass

Performance Data

Max Flow Rate:	629 m³/h
Max Noise Level:	66 dB(A)
Total Absorbation:	216W
Filter	Aluminium Casette Filter + Optional Carbon Filter
Control	3S Touch Control
Lighting	2x3W LED
Duct Size	150mm

Color

Black White

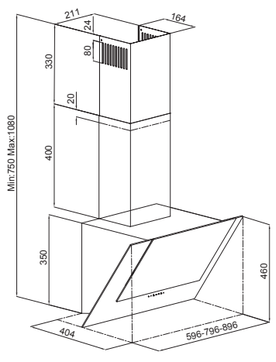

A

55cm 65cm

3423

Technical Data

Category	Wall Type Hoods
Size	60 - 80 - 90cm
Duct Out Version	Intern (Duct Out / Recirclation)
Finish	Tempered Glass

Performance Data

Max Flow Rate:	649 m³/h
Max Noise Level:	68 dB(A)
Total Absorbation:	216W
Filter	Aluminium Casette Filter + Optional Carbon Filter
Control	3S Touch Control
Lighting	2x3W LED
Duct Size	150mm

Color

Black White

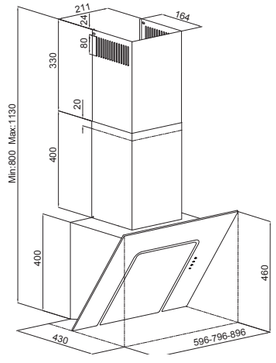

A

55cm 65cm

3422

Technical Data

Category	Wall Type Hoods
Size	60 - 80 - 90cm
Duct Out Version	Intern (Duct Out / Recirclation)
Finish	Tempered Glass

Performance Data

Max Flow Rate:	647 m³/h
Max Noise Level:	64 dB(A)
Total Absorbation:	216W
Filter	Aluminium Casette Filter + Optional Carbon Filter
Control	3S Touch Control
Lighting	2x3W LED
Duct Size	150mm

Color

Black White

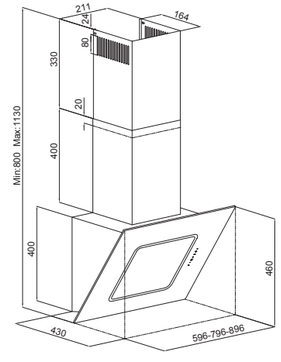

WALL-MOUNTED **HOODS**

A

3420

Technical Data

Category	Wall Type Hoods
Size	50 - 60 - 80 - 90cm
Duct Out Version	Intern (Duct Out / Recirclation)
Finish	Tempered Glass

Performance Data

Max Flow Rate:	628 m³/h
Max Noise Level:	64 dB(A)
Total Absorbation:	216W
Filter	Aluminium Casette Filter + Optional Carbon Filter
Control	3S Touch Control
Lighting	2x3W LED
Duct Size	150mm

Color

Black White Grey

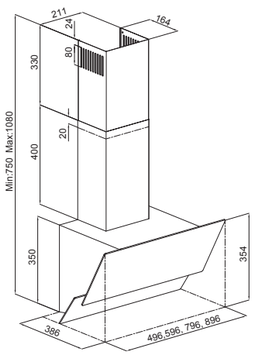

A

3374

Technical Data

Category	Wall Type Hoods
Size	60 - 80 - 90cm
Duct Out Version	Intern (Duct Out / Recirclation)
Finish	Inox + Tempered Glass

Performance Data

Max Flow Rate:	635 m³/h
Max Noise Level:	63 dB(A)
Total Absorbation:	216W
Filter	Aluminium Casette Filter + Optional Carbon Filter
Control	3S Soft Touch with Display
Lighting	2x3W LED
Duct Size	150mm

Color

Inox+ Black Inox+ White

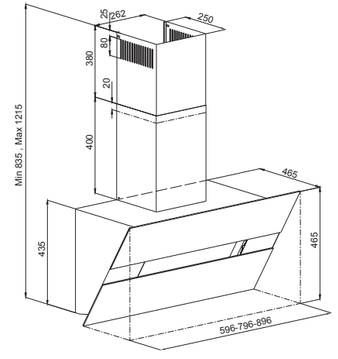

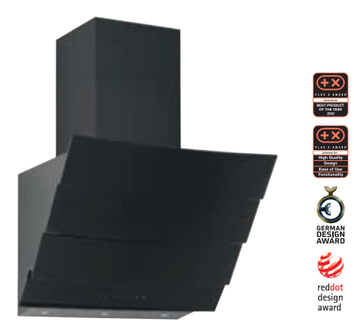

A

3370

Technical Data

Category	Wall Type Hoods
Size	60 - 80 - 90cm
Duct Out Version	Intern (Duct Out / Recirclation)
Finish	Tempered Glass

Performance Data

Max Flow Rate:	772 m³/h
Max Noise Level:	62 dB(A)
Total Absorbation:	282W
Filter	Aluminium Casette Filter + Optional Carbon Filter
Control	3S+1B Touch Control
Lighting	4x1,1W Power LED
Duct Size	150mm

Color

Black White

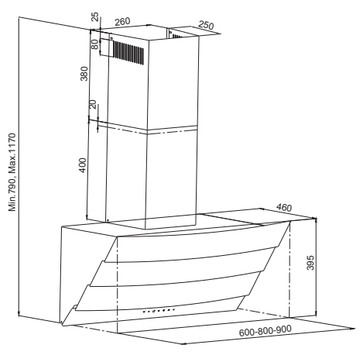

A

3330

Technical Data

Category	Wall Type Hoods
Size	60 - 80 - 90cm
Duct Out Version	Intern (Duct Out / Recirclation)
Finish	Inox + Tempered Glass

Performance Data

Max Flow Rate:	800 m³/h
Max Noise Level:	65 dB(A)
Total Absorbation:	282W
Filter	Aluminium Casette Filter + Optional Carbon Filter
Control	3S+1B Soft Touch with Display
Lighting	4x1,1W Power LED
Duct Size	150mm

Color

Inox Inox+ Black Inox+ White

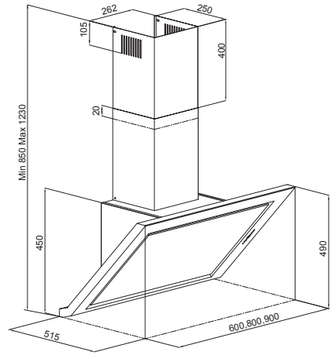

A

3283

Technical Data

Category	Wall Type Hoods
Size	60 - 80 - 90cm
Duct Out Version	Intern (Duct Out / Recirclation)
Finish	Inox + Tempered Glass

Performance Data

Max Flow Rate:	649m³/h
Max Noise Level:	67 dB(A)
Total Absorbation:	216W
Filter	Aluminium Casette Filter + Optional Carbon Filter
Control	3S Mechanical Push Button
Lighting	2x3W LED
Duct Size	150mm

Color

Inox+ Black

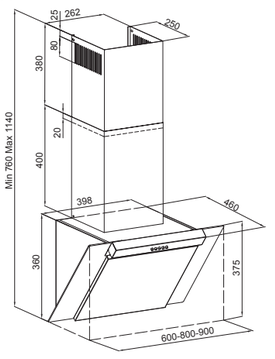

A

3265

Technical Data

Category	Wall Type Hoods
Size	60 - 80 - 90 - 120cm
Duct Out Version	Intern (Duct Out / Recirclation)
Finish	Tempered Glass

Performance Data

Max Flow Rate:	840m³/h
Max Noise Level:	56 dB(A)
Total Absorbation:	170W
Filter	Aluminium Casette Filter + Optional Carbon Filter
Control	3S+1B Touch Control
Lighting	5x1,1W Power LED
Duct Size	150mm

Color

Black White

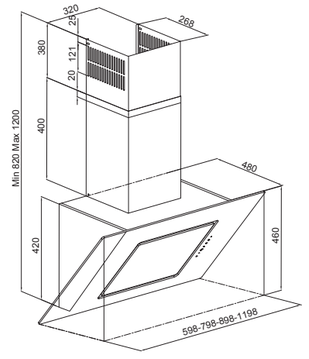

WALL-MOUNTED **HOODS**

A+

55cm 65cm

3180

Technical Data

Category	Wall Type Hoods
Size	100cm
Duct Out Version	Intern (Duct Out / Recirclation)
Finish	Inox

Performance Data

Max Flow Rate:	783m³/h
Max Noise Level:	66 dB(A)
Total Absorbation:	284W
Filter	Aluminium Casette Filter + Optional Carbon Filter
Control	3S+1B Soft Touch with Display
Lighting	3x3W LED
Duct Size	150mm

Color

Inox

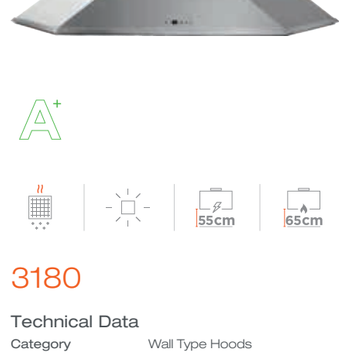

A

55cm 65cm

3155 LX

Technical Data

Category	Wall Type Hoods
Size	60 - 70 - 90cm
Duct Out Version	Intern (Duct Out / Recirclation)
Finish	Inox + Tempered Glass

Performance Data

Max Flow Rate:	621m³/h
Max Noise Level:	70 dB(A)
Total Absorbation:	216W
Filter	Aluminium Casette Filter + Optional Carbon Filter
Control	3S Touch Control
Lighting	2x3W LED
Duct Size	150mm

Color

Inox Black White

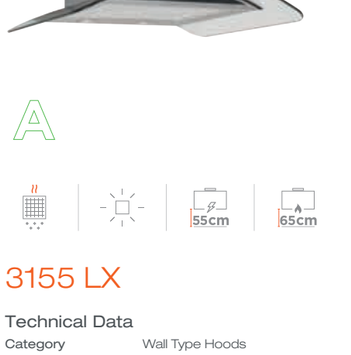

A

55cm 65cm

3122

Technical Data

Category	Wall Type Hoods
Size	60 - 80 - 90cm
Duct Out Version	Intern (Duct Out / Recirclation)
Finish	Inox + Tempered Glass

Performance Data

Max Flow Rate:	750m³/h
Max Noise Level:	65 dB(A)
Total Absorbation:	281W
Filter	Aluminium Casette Filter + Optional Carbon Filter
Control	3S+1B Soft Touch with Display
Lighting	2x1,5W G4 LED
Duct Size	150mm

Color

Inox Black White

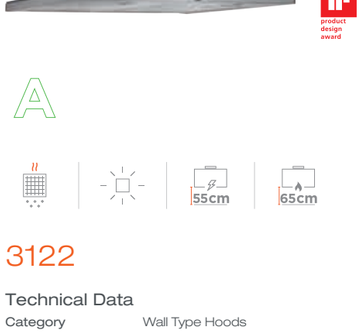

A+

55cm 65cm

3120

Technical Data

Category	Wall Type Hoods
Size	50 - 60 - 70 - 80 - 90cm
Duct Out Version	Intern (Duct Out / Recirclation)
Finish	Inox

Performance Data

Max Flow Rate:	760m³/h
Max Noise Level:	67 dB(A)
Total Absorbation:	281W
Filter	Aluminium Casette Filter + Optional Carbon Filter
Control	3S+1B Soft Touch with Display
Lighting	2x3W LED
Duct Size	150mm

Color

Inox Black White

A

55cm 65cm

3110

Technical Data

Category	Wall Type Hoods
Size	60 - 80 - 90cm
Duct Out Version	Intern (Duct Out / Recirclation)
Finish	Inox + Tempered Glass

Performance Data

Max Flow Rate:	637m³/h
Max Noise Level:	65 dB(A)
Total Absorbation:	216W
Filter	Aluminium Casette Filter + Optional Carbon Filter
Control	3S Soft Touch with Display
Lighting	2x3W LED
Duct Size	150mm

Color

Inox

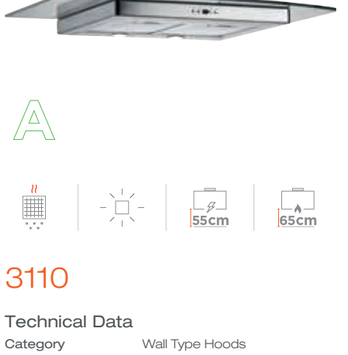

A

55cm 65cm

2242

Technical Data

Category	Wall Type Hoods
Size	60 - 90 - 100cm
Duct Out Version	Intern (Duct Out / Recirclation)
Finish	Inox

Performance Data

Max Flow Rate:	644m³/h
Max Noise Level:	67 dB(A)
Total Absorbation:	216W
Filter	Aluminium Casette Filter + Optional Carbon Filter
Control	3S Mechanical Push Button
Lighting	2x3W Bulb LED
Duct Size	150mm

Color

Inox Black White

WALL-MOUNTED **HOODS**

D

55cm 65cm

2240

Technical Data

Category	Wall Type Hoods
Size	50 - 60 - 90cm
Duct Out Version	Intern (Duct Out / Recirclation)
Finish	Inox

Performance Data

Max Flow Rate:	320m³/h
Max Noise Level:	63 dB(A)
Total Absorbation:	116W
Filter	Aluminium Casette Filter + Optional Carbon Filter
Control	3S Mechanical Push Button
Lighting	2x3W Bulb LED
Duct Size	120mm

Color

Inox Black White

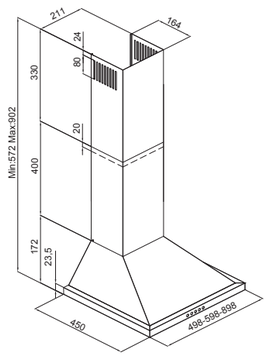

A+

55cm 65cm

2180

Technical Data

Category	Wall Type Hoods
Size	60 - 90cm
Duct Out Version	Intern (Duct Out / Recirclation)
Finish	Inox

Performance Data

Max Flow Rate:	636m³/h
Max Noise Level:	70 dB(A)
Total Absorbation:	216W
Filter	Aluminium Casette Filter + Optional Carbon Filter
Control	3S Soft Touch with Display
Lighting	2x3W LED
Duct Size	150mm

Color

Inox Black

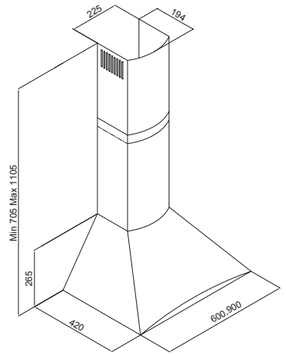

D

55cm 65cm

2153

Technical Data

Category	Wall Type Hoods
Size	50 - 60cm
Duct Out Version	Intern (Duct Out / Recirclation)
Finish	Inox

Performance Data

Max Flow Rate:	253m³/h
Max Noise Level:	61 dB(A)
Total Absorbation:	128W
Filter	Aluminium Casette Filter + Optional Carbon Filter
Control	3S Mechanical Push Button
Lighting	1x3W Bulb LED
Duct Size	120mm

Color

Inox Black White

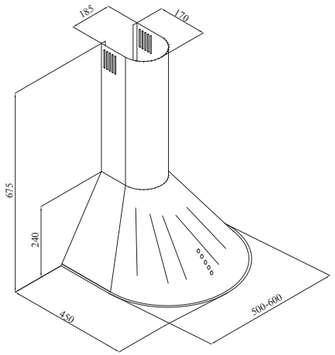

3173

Technical Data

Category	Wall Type Hoods
Size	60 - 90cm
Duct Out Version	Intern (Duct Out / Recirclation)
Finish	Inox + Tempered Glass

Performance Data

Max Flow Rate:	710m³/h
Max Noise Level:	65 dB(A)
Total Absorbation:	281W
Filter	Aluminium Casette Filter + Optional Carbon Filter
Control	2S+1B Touch Control
Lighting	2x1,5W G4 LED
Duct Size	150mm

Color

Inox Black

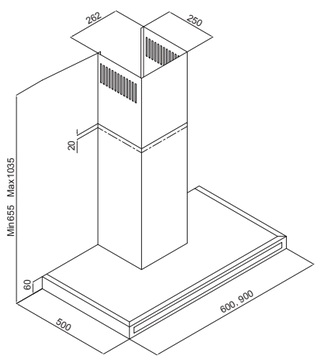

A

55cm 65cm

3170

Technical Data

Category	Wall Type Hoods
Size	60 - 70 - 80 - 90 - 120cm
Duct Out Version	Intern (Duct Out / Recirclation)
Finish	Inox

Performance Data

Max Flow Rate:	647m³/h
Max Noise Level:	67 dB(A)
Total Absorbation:	216W
Filter	Aluminium Casette Filter + Optional Carbon Filter
Control	3S Soft Touch with Display / Mechanical Push Button
Lighting	2x3W LED
Duct Size	150mm

Color

Inox Black White

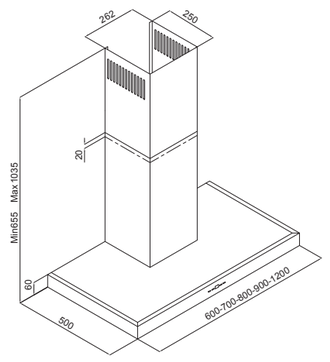

A

55cm 65cm

BUILT-IN **HOODS**

With a range of products for every kitchen type, Silverline can meet customer requirements with its cabinet solutions as well.

3129 INSIDE 2

Technical Data

Category	Built-in Hoods
Size	60 - 90 - 120cm
Duct Out Version	Intern (Duct Out / Recirclation)
Finish	Inox + Tempered Glass

Performance Data

Max Flow Rate:	635 m³/h
Max Noise Level:	64 dB(A)
Total Absorbation:	218W
Filter	Stainless Steel Casette Filter + Optional Carbon Filter
Control	3S Touch Control
Lighting	1x8W LED Stnpe
Duct Size	150mm

Color

Inox Black

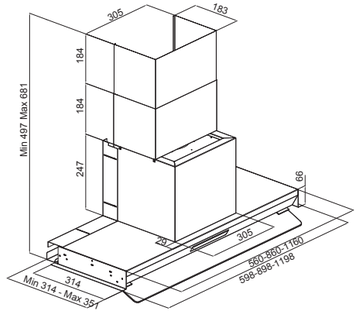

A+

55cm 65cm

1182 LIGHTFACE

Technical Data

Category	Built-in Hoods
Size	60 - 90cm
Duct Out Version	Intern (Duct Out / Recirclation)
Finish	Inox + Tempered Glass

Performance Data

Max Flow Rate:	709 m³/h
Max Noise Level:	69 dB(A)
Total Absorbation:	283W
Filter	Stainless Steel Casette Filter + Optional Carbon Filter
Control	2S+1B Touch Control
Lighting	1x8W LED
Duct Size	150mm

Color

Black White

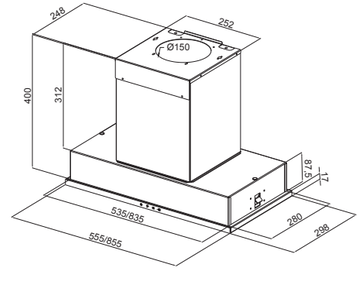

A

55cm 65cm

BUILT-IN HOODS

A+

1181 ULIGHT

Technical Data

Category	Built-in Hoods
Size	60 - 90cm
Duct Out Version	Intern (Duct Out / Recirclation)
Finish	Inox + Tempered Glass

Performance Data

Max Flow Rate:	703 m³/h
Max Noise Level:	65 dB(A)
Total Absorbation:	284W
Filter	Stainless Steel Casette Filter + Optional Carbon Filter
Control	2S+1B Touch Control
Lighting	1x9W LED Stripe
Duct Size	150mm

Color

Black White

A

1180 HIDDEN

Technical Data

Category	Built-in Hoods
Size	50 - 60 - 90cm
Duct Out Version	Intern (Duct Out / Recirclation)
Finish	Inox + Tempered Glass

Performance Data

Max Flow Rate:	747 m³/h
Max Noise Level:	65 dB(A)
Total Absorbation:	292W
Filter	Stainless Steel Casette Filter + Optional Carbon Filter
Control	3S+1B Electrical Push Button
Lighting	1x17W LED Stripe
Duct Size	150mm

Color

Inox

A

1176

Technical Data

Category	Built-in Hoods
Size	60 - 90cm
Duct Out Version	Intern (Duct Out / Recirclation)
Finish	Tempered Glass

Performance Data

Max Flow Rate:	737 m³/h
Max Noise Level:	66 dB(A)
Total Absorbation:	281W
Filter	Aluminium Casette Filter + Optional Carbon Filter
Control	3S+1B Soft Touch with Display
Lighting	3x1,1W Power LED
Duct Size	150mm

Color

Black White

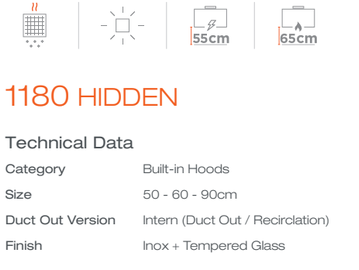

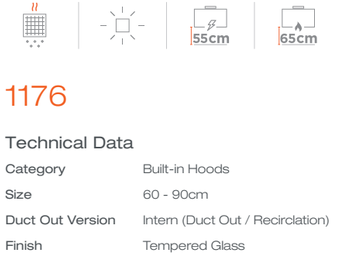

A

1175

Technical Data

Category	Built-in Hoods
Size	60 - 90cm
Duct Out Version	Intern (Duct Out / Recirclation)
Finish	Inox + Tempered Glass

Performance Data

Max Flow Rate:	642 m³/h
Max Noise Level:	69 dB(A)
Total Absorbation:	272W
Filter	Stainless Steel Casette Filter + Optional Carbon Filter
Control	5S Soft Touch with Display
Lighting	4x1,1W Power LED
Duct Size	150mm

Color

Inox Black White Inox+ Black

C

1162

Technical Data

Category	Built-in Hoods
Size	60cm
Duct Out Version	Intern (Duct Out / Recirclation)
Finish	Inox + Tempered Glass

Performance Data

Max Flow Rate:	530 m³/h
Max Noise Level:	65 dB(A)
Total Absorbation:	138W
Filter	Aluminium Casette Filter + Optional Carbon Filter
Control	3S Touch Control
Lighting	2x1,5W G4 LED
Duct Size	150mm

Color

Inox Black White

A

1144

Technical Data

Category	Built-in Hoods
Size	50-60-90cm
Duct Out Version	Intern (Duct Out / Recirclation)
Finish	Inox + Tempered Glass

Performance Data

Max Flow Rate:	623 m³/h
Max Noise Level:	67 dB(A)
Total Absorbation:	216W
Filter	Aluminium Casette Filter + Chorcoal Carbon Filter
Control	3S Touch Control
Lighting	2x3W LED
Duct Size	150mm

Color

Inox Black White

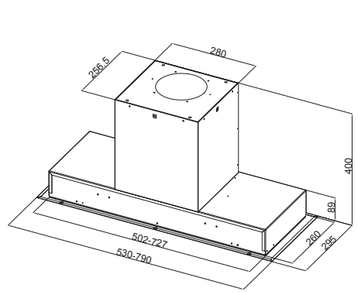

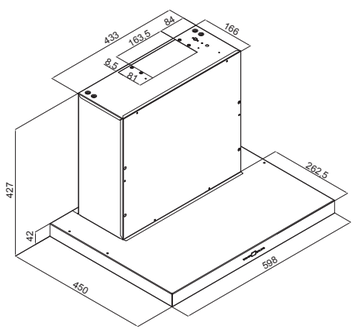

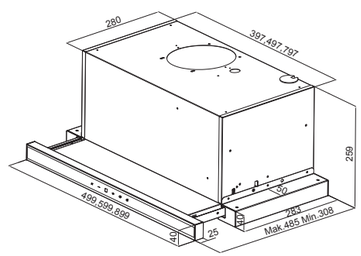

BUILT-IN HOODS

D

55cm 65cm

1350

Technical Data

Category	Built-in Hoods
Size	60cm
Duct Out Version	Intern (Duct Out / Recirclation)
Finish	Inox + Tempered Glass

Performance Data

Max Flow Rate:	483 m³/h
Max Noise Level:	68 dB(A)
Total Absorbation:	254W
Filter	Aluminium Casette Filter + Chorcoal Carbon Filter
Control	3S Touch Control / Rocker
Lighting	2x2W Bulb LED
Duct Size	120mm

Color

Inox Black White

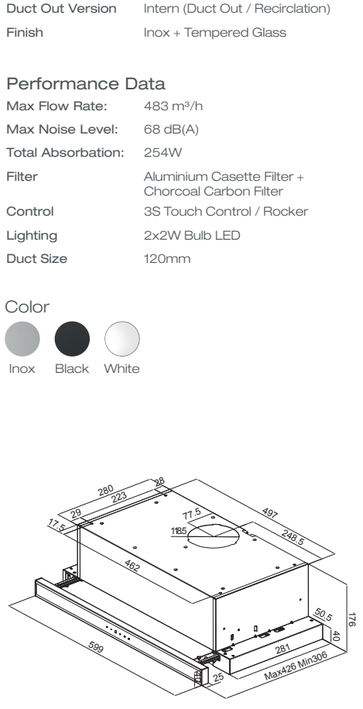

A

55cm 65cm

1190

Technical Data

Category	Built-in Hoods
Size	40 - 50 - 60 - 90cm
Duct Out Version	Intern (Duct Out / Recirclation)
Finish	Inox

Performance Data

Max Flow Rate:	410 m³/h
Max Noise Level:	69 dB(A)
Total Absorbation:	126W
Filter	Aluminium Casette Filter + Chorcoal Carbon Filter
Control	3S Rocker
Lighting	2x3W LED
Duct Size	120mm

Color

Inox Black White

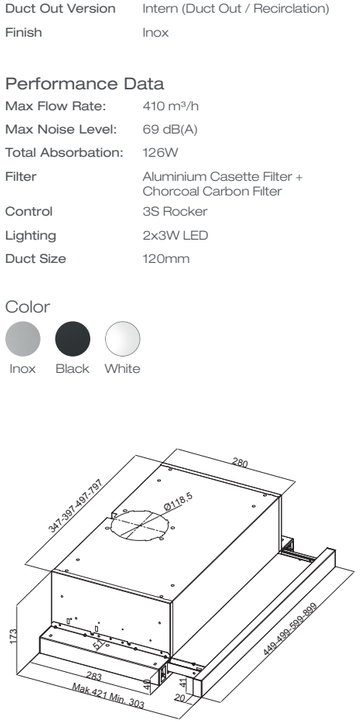

D

55cm 65cm

1151

Technical Data

Category	Built-in Hoods
Size	60 - 70 - 90cm
Duct Out Version	Intern (Duct Out / Recirclation)
Finish	Inox

Performance Data

Max Flow Rate:	483 m³/h
Max Noise Level:	68 dB(A)
Total Absorbation:	256W
Filter	Aluminium Casette Filter + Chorcoal Carbon Filter
Control	3S Touch Control / Rocker
Lighting	2x3W LED
Duct Size	120mm

Color

Inox Black White

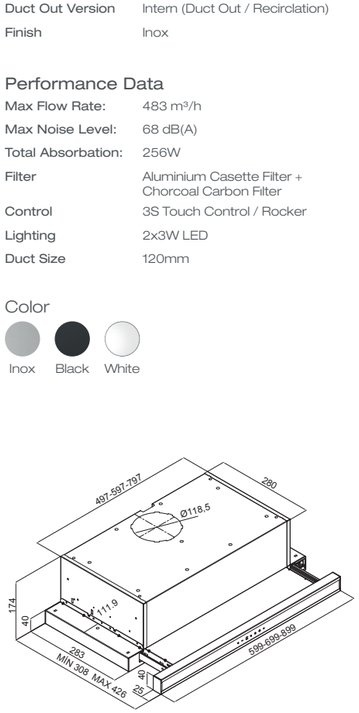

D

55cm 65cm

1201

Technical Data

Category	Built-in Hoods
Size	60 - 90cm
Duct Out Version	Intern (Duct Out / Recirclation)
Finish	Inox

Performance Data

Max Flow Rate:	483 m³/h
Max Noise Level:	68 dB(A)
Total Absorbation:	254W
Filter	Aluminium Casette Filter + Optional Carbon Filter
Control	3S Mechanical Push Button
Lighting	2x2W Bulb LED
Duct Size	120mm

Color

Inox Black White

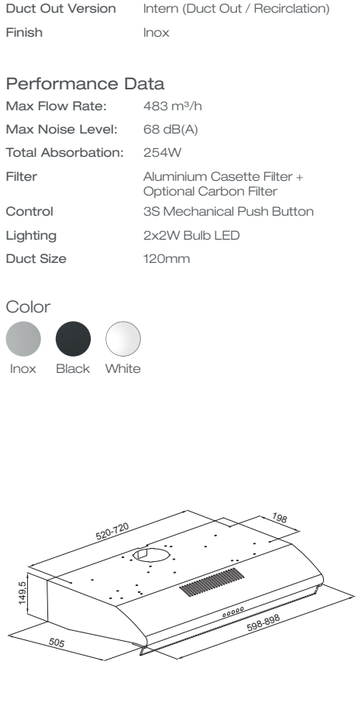

D

55cm 65cm

1200

Technical Data

Category	Built-in Hoods
Size	50 - 60 - 80 - 90cm
Duct Out Version	Intern (Duct Out / Recirclation)
Finish	Inox

Performance Data

Max Flow Rate:	215 m³/h
Max Noise Level:	67 dB(A)
Total Absorbation:	131W
Filter	Aluminium Casette Filter + Optional Carbon Filter
Control	3S Mechanical Push Button
Lighting	2x3W Bulb LED
Duct Size	120mm

Color

Inox Black White

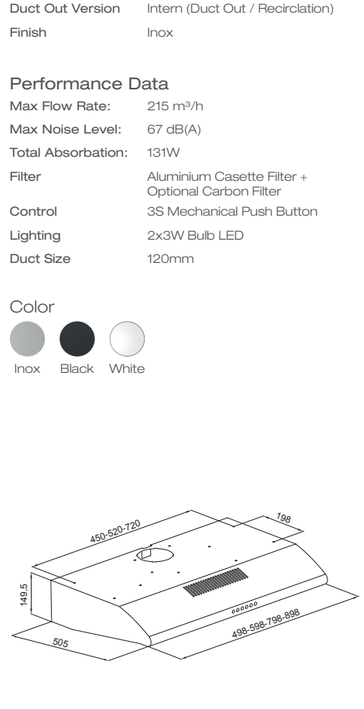

ACCESSORIES

EXTERNAL MOTORS

1240

Technical Data

Category	Extern Motor
Finish	Inox

Performance Data

Max Flow Rate:	800 m³/h
Total Absorbation:	275W
Duct Size	150mm

Color

Inox White

1250

Technical Data

Category	Extern Motor
Finish	Inox

Performance Data

Max Flow Rate:	1400 m³/h
Total Absorbation:	550W
Duct Size	200mm

Color

Inox

1260

Technical Data

Category	Extern Motor
Finish	Inox

Performance Data

Max Flow Rate:	1000 m³/h
Total Absorbation:	280W
Duct Size	150mm

Color

Inox

1270

Technical Data

Category	Extern Motor
Finish	Inox

Performance Data

Max Flow Rate:	950 m³/h
Total Absorbation:	200W
Duct Size	150mm

Color

Inox

1280

Technical Data

Category	Extern Motor
Finish	Inox

Performance Data

Duct Size	150mm

Color

Inox

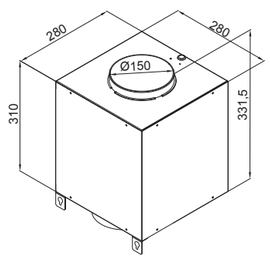

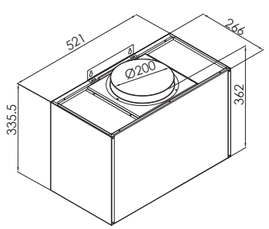

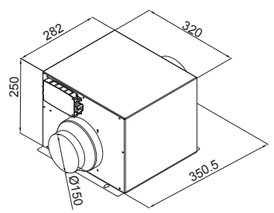

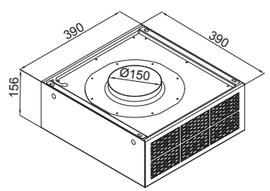

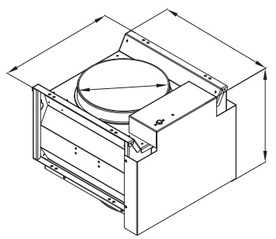

REMOTE CONTROL

CURVED REMOTE CONTROL

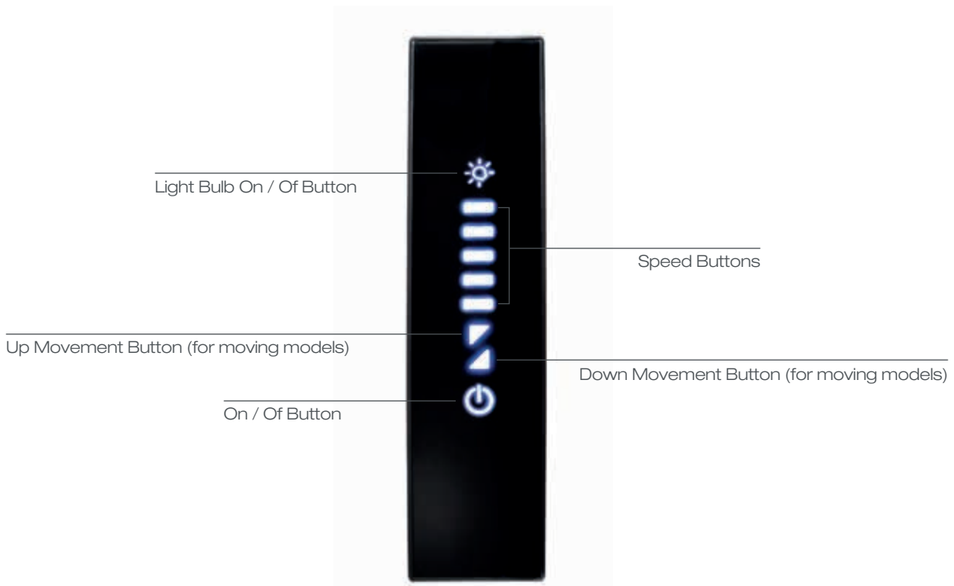

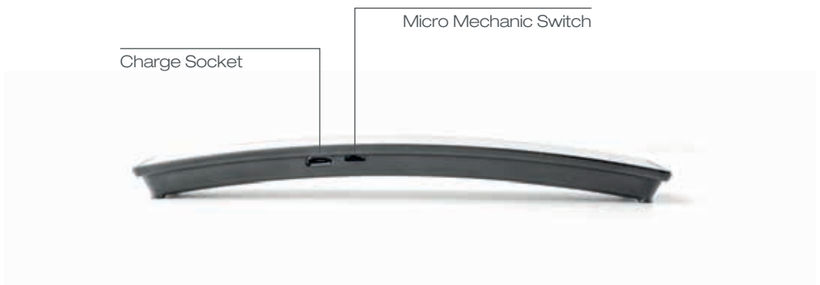

ERGONOMICS

Curved design which fits ergonomics of hand perfectly.

USER-FRIENDLY

Control all of the hood features at a touch.

RECHARGEABLE

Lithium battery, rechargeable by the included micro USB cord.

MAGNETIC

Magnets placed inside the body allow it to be securely placed on any metal surface.

STANDARD REMOTE CONTROL

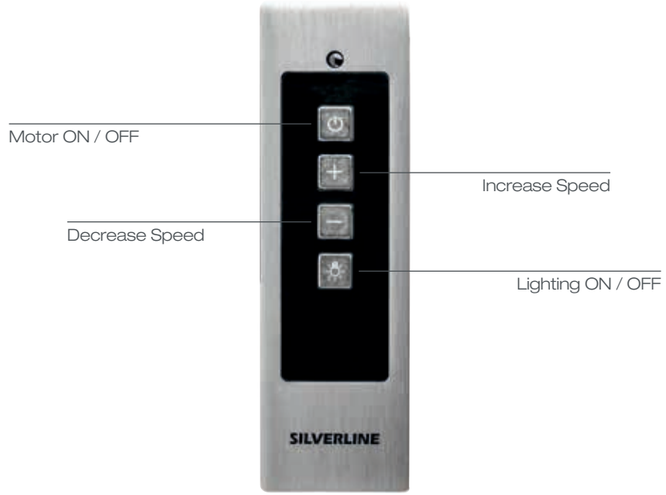

retroline

indispensable designs that
combine classic values
and high technology

RETRO SERIES

A+

2238

Technical Data

Category	Retro Hoods
Size	50 - 60 - 90cm
Duct Out Version	Intern (Duct Out / Recirclation)
Finish	Inox

Performance Data

Max Flow Rate:	636 m³/h
Max Noise Level:	67 dB(A)
Total Absorbation:	216W
Filter	Aluminium Casette Filter + Optional Carbon Filter
Control	3S Mechanical Push Button
Lighting	2x3W LED
Duct Size	150mm

Color

Black Beige Claret Red

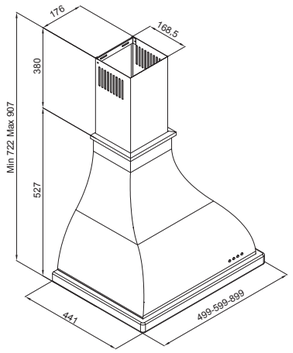

C

2234

Technical Data

Category	Retro Hoods
Size	60 - 90cm
Duct Out Version	Intern (Duct Out / Recirclation)
Finish	Inox

Performance Data

Max Flow Rate:	606 m³/h
Max Noise Level:	68 dB(A)
Total Absorbation:	310W
Filter	Aluminium Casette Filter + Optional Carbon Filter
Control	3S Soft Touch with Display
Lighting	2x3W LED
Duct Size	150mm

Color

Beige Gold

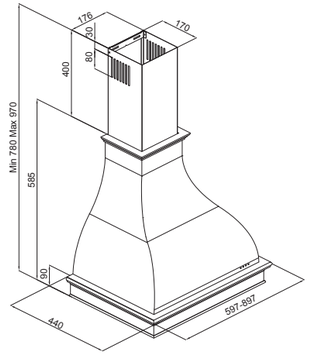

A

2120

Technical Data

Category	Retro Hoods
Size	60 - 90cm
Duct Out Version	Intern (Duct Out / Recirclation)
Finish	Inox

Performance Data

Max Flow Rate:	648 m³/h
Max Noise Level:	68 dB(A)
Total Absorbation:	216W
Filter	Aluminium Casette Filter + Optional Carbon Filter
Control	3S Mechanical Push Button
Lighting	2x3W LED
Duct Size	150mm

Color

Inox Black Beige Claret Red

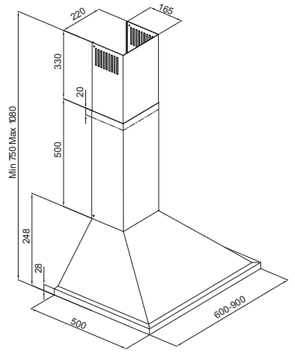

RETRO SERIES

RS6235R02

A

- 60 cm
- Control panel: Retro Black, Beige, Claret Red Enamelled
- Door panel: Retro Black, Beige, Claret Red Enamelled
- 6 cooking functions
- 2 retro knobs
- Analogue timer with start and stop programmer
- Removable side racks
- Grill, thermostat, turbo fan
- Cooling fan
- Oven light
- 1 chrome grid, 2 deep trays
- 57 l net volume
- A energy class
- Double glass door

RS6235C02

RS6235B02

57l

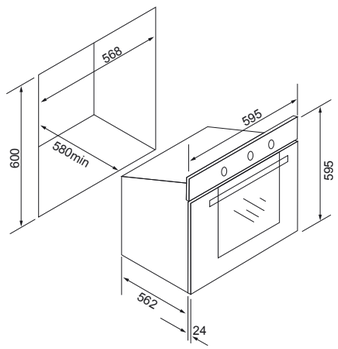

9 Program | **23** Liter | **5** Level

MW9033C01

Retro Beige Built-In Microwave

- Power output 800w
- Grill cooking
- 1100W grill
- 1 Grill
- 3 Combination power settings
- 30 minutes mechanic timer
- Pull handle door, defrost setting
- Cooking end signal
- Stainless cavity and silver housing
- Metal rack
- Glass turntable

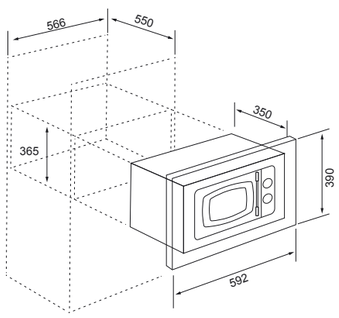

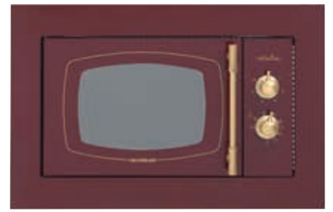

9 Program | **23** Liter | **5** Level

MW9033R01

Retro Claret Red Built-In Microwave

- Power output 800w
- Grill cooking
- 1100W grill
- 1 Grill
- 3 Combination power settings
- 30 minutes mechanic timer
- Pull handle door, defrost setting
- Cooking end signal
- Stainless cavity and silver housing
- Metal rack
- Glass turntable

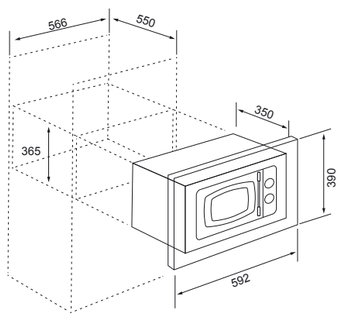

9 Program | **23** Liter | **5** Level

MW9033B01

Retro Black Built-In Microwave

- Power output 800w
- Grill cooking
- 1100W grill
- 1 Grill
- 3 Combination power settings
- 30 minutes mechanic timer
- Pull handle door, defrost setting
- Cooking end signal
- Stainless cavity and silver housing
- Metal rack
- Glass turntable

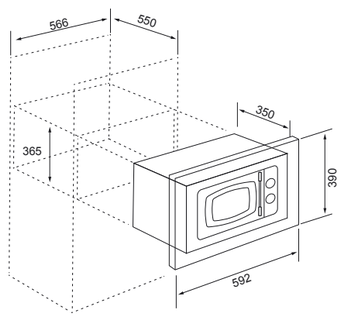

RETRO SERIES

60 cm | 9250W Power

RS5322C01

Retro Beige Enamelled

- 4 gas burner
- Cast iron pan supports and burner caps
- Front control
- Auto-ignition integrated in the burner operated by each knob.
- Auto-lock safety device integrated in each burner
- Italian Burner
- 1 x Triple ring burner: 3500 W
- 1 x Rapid burner: 3000 W
- 1 x Semi-rapid burner: 1750 W
- 1 x Auxiliary burner: 1000 W

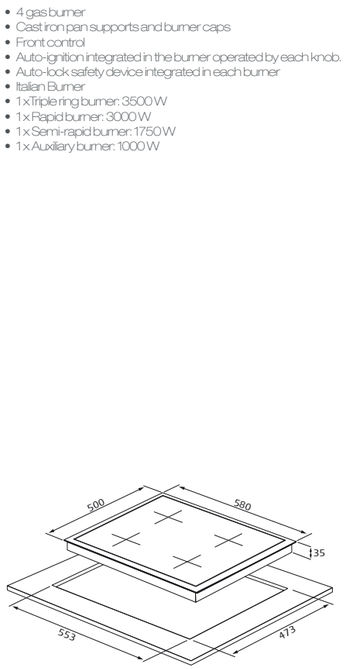

70 cm | 11000W Power

RS5336C01

Retro Beige Enamelled

- 5 gas burner(1 Wok burner)
- Cast iron pan supports and burner caps
- Front control
- Auto-ignition integrated in the burner operated by each knob.
- Auto-lock safety device integrated in each burner
- Italian Burner
- 1 x Triple ring burner: 3500 W
- 1 x Rapid burner: 3000 W
- 2 x Semi-rapid burner: 1750 W
- 1 x Auxiliary burner: 1000 W

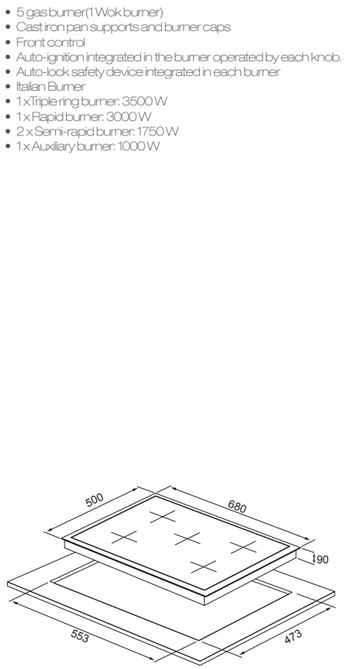

60 cm | 9250W Power

RS5322B01

Rustic Anthracite Enamelled

- 4 gas burner
- Cast iron pan supports and burner caps
- Front control
- Auto-ignition integrated in the burner operated by each knob.
- Auto-lock safety device integrated in each burner
- Italian Burner
- 1 x Triple ring burner: 3500 W
- 1 x Rapid burner: 3000 W
- 1 x Semi-rapid burner: 1750 W
- 1 x Auxiliary burner: 1000 W

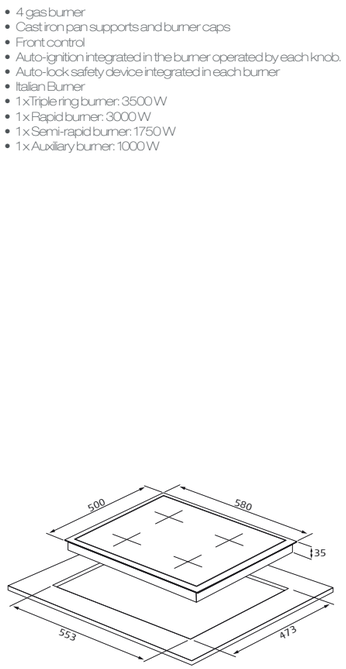

70 cm | 11000W Power

RS5336B01

Rustic Anthracite Enamelled

- 5 gas burner(1 Wok burner)
- Cast iron pan supports and burner caps
- Front control
- Auto-ignition integrated in the burner operated by each knob.
- Auto-lock safety device integrated in each burner
- Italian Burner
- 1 x Triple ring burner: 3500 W
- 1 x Rapid burner: 3000 W
- 2 x Semi-rapid burner: 1750 W
- 1 x Auxiliary burner: 1000 W

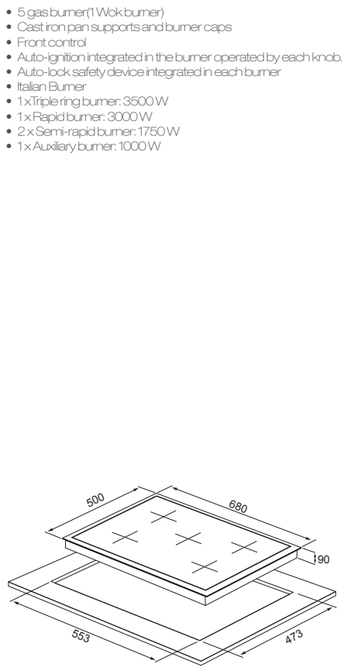

60 cm | 9250W Power

RS5322R01

Retro Claret Red Enamelled

- 4 gas burner
- Cast iron pan supports and burner caps
- Front control
- Auto-ignition integrated in the burner operated by each knob.
- Auto-lock safety device integrated in each burner
- Italian Burner
- 1 x Triple ring burner: 3500 W
- 1 x Rapid burner: 3000 W
- 1 x Semi-rapid burner: 1750 W
- 1 x Auxiliary burner: 1000 W

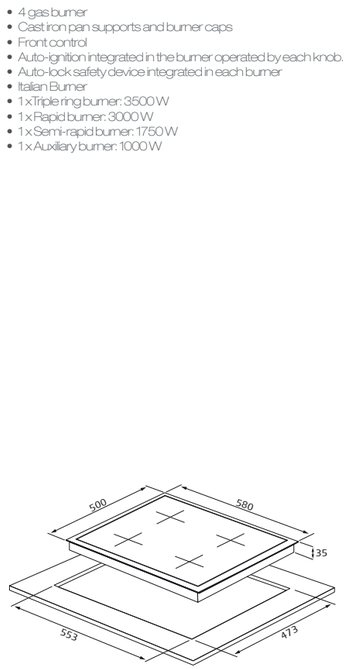

70 cm | 11000W Power

RS5336R01

Retro Claret Red Enamelled

- 5 gas burner(1 Wok burner)
- Cast iron pan supports and burner caps
- Front control
- Auto-ignition integrated in the burner operated by each knob.
- Auto-lock safety device integrated in each burner
- Italian Burner
- 1 x Triple ring burner: 3500 W
- 1 x Rapid burner: 3000 W
- 2 x Semi-rapid burner: 1750 W
- 1 x Auxiliary burner: 1000 W

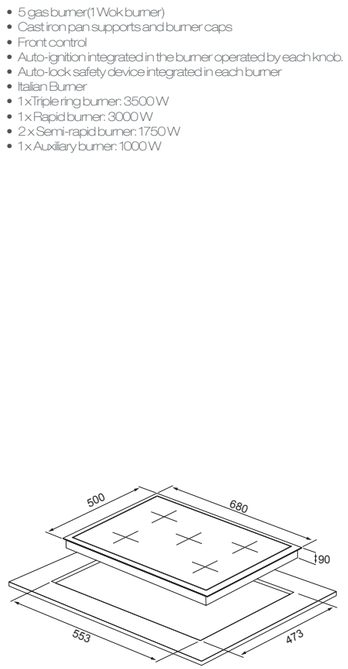

REFRIGERATORS

With their advanced functions, Silverline refrigerators keep your food as fresh as the day they were stored.

LARGE CAPACITY

Provides spacious storage area thanks to large inner volume.

NO FROST

The no-frost system isolates the freezer from humidity, ensuring that the air inside the fridge remains dry. Thus it prevents humidity and frosting on the inner walls of the product to ensure that food does not freeze. Thanks to this system, food items are frozen more quickly, more evenly and balanced matter, remaining as fresh as the first day.

EXTRA COLD SECTION

Designed specifically for dairy/breakfast items, the "Chiller Compartment" keeps food between - 2°C and + 3°C. This compartment is ideal for storing breakfast items and etc..

ELECTRONIC CONTROL

The "Electronic Control" panel allows the user to set separate temperatures for the fridge and the freezer.

VACATION MODE

This function allows you to operate your refrigerator at low power when you are going to be away from home for a long time. When this function is selected, food in the freezer is kept as they are. To prevent bad odours in the freezer, the temperature is kept at around 12 degrees all the time. Moreover, you also save energy since the compressor does not run continuously in this mode.

ARTIFICIAL INTELLIGENCE

Thanks to the "Artificial Intelligence" function, the refrigerator detects the environmental temperature to set its own refrigerator, saving you the trouble of manual setting.

TOUCH CONTROL

Along with a modern appearance, the "Touch Control" offers ease of use in terms of technologic aspects to allow the user to set separate temperatures for each compartment.

MOISTURE CONTROL (VEGETABLE)

Without the humidity control function, the air inside the crisper evaporates, reaching the food and shortening its life.
Thanks to the adjustable "Humidity-Controlled Crisper" function in your refrigerator, the air inside the crisper condenses to allow you to keep humidity ratios of the food under control. This way, food items are kept fresh for a longer time.

BLUE LIGHT

Equipped with sterilisation function, the "Blue Light" lighting function illuminates fruits and vegetables with a light that has the ideal wavelength, ensuring that they photosynthesise as they do in the nature. Food whose tastes and aromas are preserved remain fresh for a longer time and preserve the vitamin C they contain.

ICE MAKER

"Rotary Ice Maker" makes ice in about 2-3 hours. Ice pieces in the container fall into the ice storage container below once the knob on it is turned. The ice storage container is only intended to store ice.

LED LIGHTING

It provides a more powerful white light for the interior of the refrigerator.

ANTI-FINGER PRINT

This feature ensures that the outer surface of the refrigerator looks clean at all times.

HIGH PERFORMANCE REFRIGERATION TECHNOLOGIES

An indispensable element of any kitchen with a unique design and essential functionality. SILVERLINE Refrigerators are equipped with significant technical features such as the Anti-Odor and Air Cleaning System with UV, LED and Platinum Rays, the Anti-bacterial System preventing bacterial growth and propagation, the Vitamin-C Fresh System ensuring moisture control that will allow fruit and vegetables to maintain their nutritional value for longer, and the Multiple Air Flow System that increases the efficiency of your refrigerator. The energy class refrigeration technology offers high performance with minimal operating noise. In addition to providing your kitchen with a contemporary look thanks to their elegant aesthetic and inox steel finish, they also maintain a clean appearance cleanliness thanks to their fingerprint-resistant surface. The changeable opening direction of the doors provides for flexible installation that can be adapted kitchens of all styles.

REFRIGERATORS

R12051B01

Cross Door Refrigerator

- A+ Energy Level
- T Climate Type
- 492lt Total Gross Volume
- 482lt Total Net Volume
- Touch Control Panel
- Total No Frost
- Multi Air Flow
- 4 Stars Freezer
- Black Colour Glass Door
- Blue LED Light Sterilization Function
- Artificial Intelligence Function
- 6 Drawers Freezer
- 3 glass shelves on fridge part
- 6 shelves on fridge door balcony
- 2 crisper drawers
- Loading Quantity 40'HQ: 52 pcs
- Product Dimension (WDH): 833x654x1820mm
- Packing Dimension (WDH): 908x712x1925mm

R12051W01

Cross Door Refrigerator

- A+ Energy Level
- T Climate Type
- 492lt Total Gross Volume
- 482lt Total Net Volume
- Touch Control Panel
- Total No Frost
- Multi Air Flow
- 4 Stars Freezer
- White Colour Glass Door
- Blue LED Light Sterilization Function
- Artificial Intelligence Function
- 6 Drawers Freezer
- 3 glass shelves on fridge part
- 6 shelves on fridge door balcony
- 2 crisper drawers
- Loading Quantity 40'HQ: 52 pcs
- Product Dimension (WDH): 833x654x1820mm
- Packing Dimension (WDH): 908x712x1925mm

REFRIGERATORS

R12051F01

Cross Door Refrigerator

- A+ Energy Level
- T Climate Type
- 492lt Total Gross Volume
- 482lt Total Net Volume
- Touch Control Panel
- Total No Frost
- Multi Air Flow
- 4 Stars Freezer
- Mirror Glass Door
- Blue LED Light Sterilization Function
- Artificial Intelligence Function
- 6 Drawers Freezer
- 3 glass shelves on fridge part
- 6 shelves on fridge door balcony
- 2 crisper drawers
- Loading Quantity 40'HQ: 52 pcs
- Product Dimension (WDH): 833x654x1820mm
- Packing Dimension (WDH): 908x712x1925mm

R12051X01

Cross Door Refrigerator

- A+ Energy Level
- T Climate Type
- 492lt Total Gross Volume
- 482lt Total Net Volume
- Touch Control Panel
- Total No Frost
- Multi Air Flow
- 4 Stars Freezer
- Inox Door
- Blue LED Light Sterilization Function
- Artificial Intelligence Function
- 6 Drawers Freezer
- 3 glass shelves on fridge part
- 6 shelves on fridge door balcony
- 2 crisper drawers
- Loading Quantity 40'HQ: 52 pcs
- Product Dimension (WDH): 833x654x1820mm
- Packing Dimension (WDH): 908x712x1925mm

R12046B01

Side By Side Refrigerator

- A+ Energy Class
- Door Opened Over Alarm
- 562lt Total Gross Volume
- 514 Lt Net Capacity
- Quick Freezing Function
- Electronic control
- Total No Frost
- Black Glass
- 40 HQ: 48 pcs
- ST Climate
- R600a
- Led Touch Screen
- 120 Watt
- Quick Cooling Function
- Holiday Function
- Fridge Closed Function
- Child Lock
- 90 cm Width
- Product Dimension: W910 x D650(+Handle 700) x H1770

R12066X01

Side By Side Refrigerator

- A+ energy level
- Inox Door
- 520lt Total Gross Volume
- 474L Net Total Volume
- 322L Fridge Volume
- 127L Freezer Volume
- 25L variable compartment volume
- Inside condenser
- 12kg freezer capacity
- 84kg/92kg net/gross weight
- 38dB noise
- Total No Frost
- 4stars freezer
- Loading Capatiy 40HQ: 52pcs
- T climate type
- Electronic LED Display Control
- 220240V/50Hz
- Unit Dimension: 920*630*1765mm
- Package Dimension: 977*677*1855mm

70 cm

R12073X01

Combi Type Refrigerator

- Combi Double Door Refrigerator
- Inox Door
- Electronic Touch Control Panel
- Total No Frost
- Multi Air Flow
- Revisable Door
- Recessed Handle
- 41dB Noise Level
- T Climate Type
- 416l Total Net Volume
- 468l Total Gross Volume
- Unit Dimension (WDH): 700x666x1880
- Packing Dimension (WDH): 760x720x1930

60 cm

R12057X01

Combi Type Refrigerator

- A+ Energy Level
- Inox
- Net Volume Total (l)317
- Gross Volume Total (l)360
- Gross Volume Freezer (l)129
- Net Volume Fridge (l)222
- Net Volume Freezer (l)95
- Condensor TypeSkin condensor
- Freezing Capacity15.0 kg/24h
- Weight (kg) Net / Gross70/76
- Noise Level dB(A)43
- DefrostNoFrost
- Freezer Rating4 Star: 18°C
- Refrigerant (R600a/R134a)R600a/50g
- Reversible DoorYes
- Door Panel Material & ColorInox
- Evaporator TypeNo
- Interior LampYes/ 1W
- Beverage bottle bin2.0L
- Temperature ControlElectronic
- Climate ClassT
- Power Input (watt)140+160
- Power Voltage220240v/50Hz
- Dimension Product (mm)W600 x D685 x H1850
- Dimension Package (mm)W643 x D720 x H1928
- 40' / 40'HC Quantity (piece)54/72

60 cm

R12057B01

Combi Type Refrigerator

- Energy Class A+
- Net Volume Total (l)317
- Net Volume Fridge (l)222
- Net Volume Freezer (l)95
- Gross Volume Total (l)360
- Gross Volume Freezer (l)129
- Condensor TypeSkin condensor
- Refrigerant (R600a/R134a)R600a/50g
- Freezer Rating4 Star: 18°C
- Freezing Capacity15.0 kg/24h
- Weight (kg) Net / Gross70/76
- Power Voltage220240v/50Hz
- Power Input (watt)140+160
- Temperature ControlElectronic
- Noise Level dB(A)43
- DefrostNoFrost
- Black Glass
- Reversible DoorYes
- Door Panel Material & ColorInox
- Evaporator TypeNo
- Interior LampYes/ 1W
- 40'HC Quantity (piece)66
- Beverage bottle bin2.0L
- Climate ClassT
- Dimension Product (mm)W600 x D685 x H1850
- Dimension Package (mm)W643 x D720 x H1928

60 cm

R12057W01

Combi Type Refrigerator

- Energy Class A+
- Net Volume Total (l)317
- Net Volume Fridge (l)222
- Net Volume Freezer (l)95
- Gross Volume Total (l)360
- Gross Volume Freezer (l)129
- Condensor TypeSkin condensor
- Refrigerant (R600a/R134a)R600a/50g
- Freezer Rating4 Star: 18°C
- Freezing Capacity15.0 kg/24h
- Weight (kg) Net / Gross70/76
- Power Voltage220240v/50Hz
- Power Input (watt)140+160
- Temperature ControlElectronic
- Noise Level dB(A)43
- DefrostNoFrost
- White Glass
- Reversible DoorYes
- Door Panel Material & ColorInox
- Evaporator TypeNo
- Interior LampYes/ 1W
- 40'HC Quantity (piece)66
- Beverage bottle bin2.0L
- Climate Class
- Dimension Product (mm)W600 x D685 x H1850
- Dimension Package (mm)W643 x D720 x H1928

REFRIGERATORS

54 cm

R12060W01

Combi Static Refrigerator

- Energy Efficiency Class A+
- Gross Volume 260l
- Net Volume: 260L(R:189, F:71)
- Net Kg: 58kg
- Gross Kg: 64kg
- Load Capacity(20FT/40FT/40HQ): 37/76/100
- Safety glass
- Static
- ECO LED light
- Fruit and vegetable crisper
- 2L bottle rack
- Reversible door
- Grip handle optional
- Water dispenser optional
- Brandnew industry design,stylish as popularity.
- Colour: WHITE
- Climate: ST
- Dimension(W×D×H)(mm): 545×585×1800(without handle)

70 cm

R12064X01

Double Door TMF Refrigerator

- A+ Energy Class
- 425 net l
- 459 gross l
- 330L fridge capacity 95L freezer capacity
- 4 star rating freezer, door panel inox
- 43 dB noise level
- R600a gas
- Electronic control
- Full no frost
- Led Light
- T Climate
- Recessed handle
- Loading Quantities (20ft/40ft/40HC): 66
- Product Size (WxDxH): 700x670x1770 mm
- Packing Size (WxDxH): 741x715x1860 mm

70 cm

R12013X02

Double Door TMF Refrigerator

- A+ Energy Efficiency Class
- Total gross volume: 400 tl
- Total Net Capacity: 364 Lt
- Net Refrigerator Capacity: 273 Lt
- Net Freezer Capacity: 91 Lt
- 1 Glass Shelf and 2 Door Balconies in Freezer
- Compartment
- 4 Star Freezer
- Outside Condenser
- New 430 stainless steel panel
- Stainless steel handle
- Crisper, 2 Glass Shelves and 3 Door Balconies in
- Refrigerator Compartment
- Loading Quantity (20'/40'/40'H): 21/48/67
- T Climate Type
- R600a Refrigerant
- 44 dB Noise Level
- Automatic Defrosting Type
- Adjustable Front Feet
- NoFrost
- Mechanical Control
- Multi Airflow Control
- Interior Light
- Reversible Door
- Net Weight: 75 Kg
- Product Dimensions WxDxH (mm): 696 x 722 x 1712

60 cm

R12044X01

Double Door TMF Refrigerator

- A+ Energy
- Inox
- 340lt net volume
- 373lt gross volume
- 294 LT Net Capacity
- T Climate
- Total No Frost
- 40 HQ: 72 pcs
- 43dB Noise Level
- R600a Refrigerant
- 220-240V/50Hz
- Product Size (WxDxH): 595*695*1724 mm
- Packing Size (WxDxH): 655*735*1770 mm

REFRIGERATORS

A | 60 cm

R12047S01

Double Door TMF Refrigerator

- A Energy Class
- 319 L Gross / 311 L Net Capacity
- 57 kg Gross/ 51 kg Net
- Mechanical Temperature Control
- Defrost
- Silver
- 60 cm Width
- 40 HQ: 73 pcs
- ST Climate
- Dimension Product (WxDxH) : 60x60x170 cm

A+ | 55 cm

R12056W01

Double Door TMF Refrigerator

- A+ Energy Class
- 42/47kg
- Net Volume: 238L(R:197, F:41)
- Mechanical control
- Manuel Defrost
- Climate: ST/N
- Transparent drawers
- Interior light
- Fruit and vegetable crisper
- Tempered glass shelf
- 2L bottle rack
- Reversible door
- Load Capacity (40HQ) : 108
- WHITE
- Dimension(WxDxH)(mm): 550×550× 1590

A++ | 55 cm

R12055W01

Double Door TMF Refrigerator

- A++ Energy Class
- Gross Volume 210l
- Net Volume: 207L(R:R:166,F:41)
- 40/45 kg
- Manual Defrost
- Mechanical control
- Climate: ST
- Transparent drawers
- Interior light
- Reversible door
- Lock optional
- White
- Product Size (WxDxH): 550x550x1430 mm
- Packing Size (WxDxH): 585x585x1462 mm

A+ | 55 cm

R12058W02

Built-In Combi

- Energy Class A+
- Gross Volume Total 259lt
- Net Volume Total (l)250
- Net Volume Fridge (l)185
- Net volume freezer (l)65
- Gross Volume Total (l)259
- Gross Volume Freezer (l)72
- DefrostAutomatic
- Temperature ControlElectronic
- Climate Class T
- Noise Level dB(A)42
- Cabinet Color White
- Interior Lamp (LED)Yes/ 2W
- Refrigerant (R600a/R134a)R600a/62g
- Power Voltage220-240v/50Hz
- 20' / 40' / 40'HC Quantity (piece)40/80/109
- Product Size (WxDxH): 540x540x1785 mm
- Packing Size (WxDxH): 560x550x1790 mm

REFRIGERATORS

54 cm

R12069W01

Combi No Frost Built-in Refrigerator

- A+ Energy Level
- Net Volume: 241L(R:189, F:71)
- Gross Volume: 250L
- Easy Touch Control Panel
- Total No Frost
- Climate Type: T
- Child Lock
- Recessed Space for Beverage
- Sliding Box for Pizza
- Safe Box for individual
- Air Flow for Fridge
- Loading 40'HC Quantity: 105pcs
- Dimension Product (mm)W540 x D545x H1772

47 cm

R12041W01

Mini Fridge

- Energy Class A+
- Net Volume: 108L
- Gross Volume: 112L
- Manual defrost
- Mechanical temperature control
- Climate: T
- Adjustable leg
- Separate freezer compartment
- Energy saving
- Reversible door
- Transparent drawers
- Interior light
- Tempered glass shelf
- Finish Colour: White
- 2L bottle rack
- Load Capacity 40HQ: 275
- Dimension(W×D×H)(mm): 470×500×850

47 cm

R12042W01

Mini Fridge

- Energy Class A+
- Net Volume: 93L
- Gross/Net kg: 23,5/21,7 kg
- Load Capacity 40HC: 338
- Mechanical control
- Energy saving
- Flush Back Design
- Adjustable Leg
- Vegetable Crisper
- Reversible door
- 2L bottle rack
- R600a Refrigerant
- 43dB Noise level
- 65W
- 220240V/50Hz
- Climate: T
- Finish Colour: White
- Dimension(W×D×H)(mm): 472mm×45mm×85mm

47 cm

R12075W01

Minibar

- Energy Level option A+
- Capacity Lt. Cooler / Freezer parts43L as net capacity; 45L as gross capacity;
- Gross Weight15,8
- Net weight14,3
- Condenser Type Inside
- Temp. Control option Mechanical
- Noise Level42db
- Revisable Door Option
- Shelves qty and materials1 wire shelf
- Recessed handle
- White Colour
- Voltage / Frequency informaitons220-240V/50Hz
- Unit Dimenison472x450x492
- Package Dimenison520x465x503

FREEZER

A+

F22005S02

Chest Freezer

- Energy Class A+
- Real capacity: 99L
- 27kg gross / 24 kg net
- Climate: T
- Mechanical Control
- Outside Condenser
- Manual defrost
- LED Light
- Handle
- Lock
- Silver
- 40 HQ: 248 pcs
- Product: W565 x D523 x H850
- Package: W605 x D545 x H870

A+

F22009S02

Chest Freezer

- Energy Class A+
- Real capacity: 142L
- 33,8 kg gross / 30,8 kg net
- Climate: T
- Mechanical Control
- Outside Condenser
- Manual defrost
- LED Light
- Handle
- Lock
- Silver
- 40 HQ: 214 pcs
- Product: W730 x D523 x H850
- Package: W770 x D545 x H870

FREEZER

F22015S01

Chest Freezer

- Energy Class A+
- Real capacity: 142L
- 40,6 kg gross / 36,6 kg net
- Climate: T
- Mechanical Control
- Outside Condenser
- Manual defrost
- LED Light
- Handle
- Lock
- Silver
- 40 HQ: 214 pcs
- Product: W945 x D523 x H850
- Package: W985 x D545 x H870

F22006W01

Upright Freezer

- Energy Class A+
- Net Volume: 85L
- Gross Volume: 92L
- Climate: T
- Electronic Control
- Manual defrost
- Weight (kg) Net / Gross: 33/35
- Finish Colour: White
- 4 drawers
- 41 dB Noise level
- Transparent drawers
- 20' / 40' / 40'HC Quantity (piece): 102/199/236
- Product: W550 x D580 x H850
- Package: W570 x D588 x H885

HS-108FN

Upright Freezer

- Energy Class A+
- Net Volume: 86L
- Gross Volume: 93L
- Freezing Capacity(kg/24h): 6
- Climate: T
- Manuel Temperature Control
- Manual defrost
- Weight (kg) Net / Gross: 29/31,3
- Finish Colour: White
- 3 drawers
- 39 dB Noise level
- Transparent drawers
- 20' / 40' / 40'HC Quantity (piece): 102/199/236
- Product: W553 x D574 x H845
- Package: W574 x D595 x H865

HS-218FN

Upright Freezer

- Energy Class A+
- Net Volume: 165L
- Gross Volume: 180L
- Freezing Capacity(kg/24h): 10
- Climate: T
- Manuel Temperature Control
- Manuel defrost
- Weight (kg) Net / Gross: 44/48
- Finish Colour: White
- 5 drawers + 1 pizza box
- 42 dB Noise level
- Transparent drawers
- 40'HC Quantity (piece): 144
- Product: W550 x D550 x H1430
- Package: W580 x D580 x H1455

F22012X01

Upright Freezer

- Energy Class A+
- 163 l TTotal Net Volume
- 182 l Total gross Volume
- Climate: T
- Electronic Control
- Inox
- 45kg net weight / 49kg gross weight
- 6 drawers
- 42 dB noice level
- 256 kWh/(year) energy consumption
- R600a/90g
- 220-240v/50Hz 95 watt
- Quantity(piece) 40'/40HQ: 108/142
- Product: W550 x D580 x H1420
- Package: W675 x D605 x H1473

HS-312FWEN

No Frost Upright Freezer

- Energy Class A+
- Net Volume: 232L
- Gross Volume: 261L
- Freezing Capacity(kg/24h): 15
- Climate: T
- Manuel Temperature Control
- Transparent drawers
- Finish Colour: White
- Weight (kg) Net / Gross: 61,5/68,5
- Total No Frost
- 6 drawers
- 42 dB Noise level
- 40'HC Quantity (piece): 73
- Product: W595 x D632 x H1722
- Package: W657 x D688 x H1763

F22007X01

Upright Freezer

- Energy Class A+
- Net Volume: 225 L
- Gross Volume: 245L
- 59kg net / 64kg gross
- Climate: T
- Electronic Control
- Inox
- 7 drawers
- 42 dB Noice Level
- 256 kWh/(year) energy consumption
- R600a/90g
- 220-240v/50Hz 95 watt
- Quantity(Piece) 40'/40HQ: 54/74
- Product: W600 x D600 x H1700
- Package: W650 x D635 x H1783

DISHWASHERS

A genuinely functional space that makes life easier after a pleasant meal, complete with an aesthetic look and functionality that helps make your kitchen more ergonomic.

DISHWASHERS

A++ | 10 Settings | 6 Program

D11018X01

Full-Integrated Dishwasher

- 60 cm
- White body + Black Control Panel + Silver buttons
- Capacity for 10 place settings
- Electronic control
- 6 washing programs
- Hidden Heating (flow heating)
- Grey baskets
- Aqua-stop inlet hose
- Memory Function
- Energy consumption: A++
- Cleaning Performance: A
- Drying Performance: A
- 2520 l water consumption
- 3/6/9 hours
- Sliding Dispenser
- Water softener
- Upper & lower spray arms
- Half Load

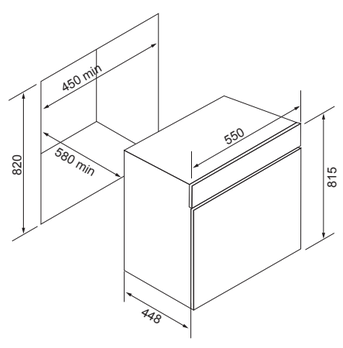

A++ | 12 Settings | 6 Program

D11011X01

Full-Integrated Dishwasher

- White body + Black Control Panel + Silver buttons
- Capacity for 12 place settings
- Electronic control
- 6 Program
- Hidden Heating (flow heating)
- Grey baskets
- Aqua-stop inlet hose
- Memory Function
- Energy consumption: A++
- Cleaning Performance: A
- Drying Performance: A
- 3080 l water consumption
- 3/6/9 hours delay start
- Sliding Dispenser
- Water softener
- Upper & lower spray arms
- Half Load

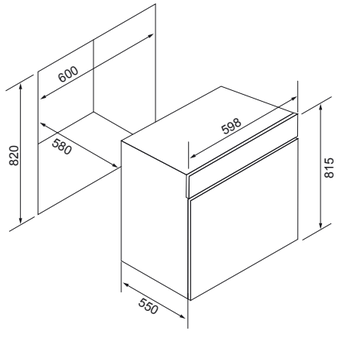

A+ | 14 Settings | 6 Program

D11024X01

Full Integrated Dishwasher

- 60 cm
- White body + Black Control Panel + Silver buttons
- 11 LT Water Consumption
- 14 Place Sets
- 52dB Noise Level
- A+ Energy Level
- 6 Program
- LED displayer
- 40 HQ : 162 pcs
- Water softener
- Aqua stop inlet hose
- Flip Dispenser
- 1-24 hours delay start
- Half Load
- Third Layer Cutlery Basket

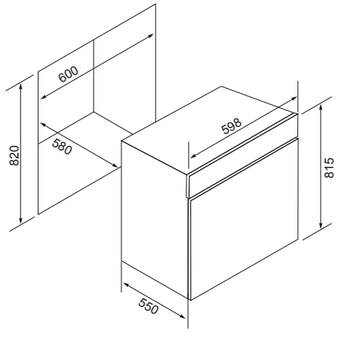

A+ | 12 Settings | 5 Program

D11033B01

Full Integrated Dishwasher

- 60 cm
- Black Glass Outdoor Panel
- Silver Colour Control Panel
- White LED Light
- 12 Capacity Settings
- A+ Energy Level
- 12L water consumption
- 49dB Noise Level
- 1-24 hr delay start
- Child Lock
- Grey baskets
- 5 programs
- Electronic Aqua Stop
- Stainless Steel Filter

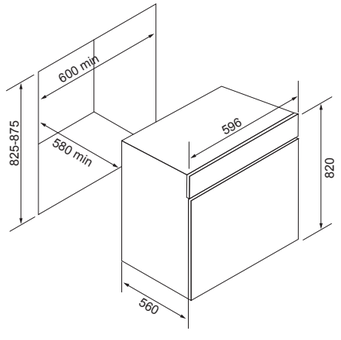

A+ | 12 Settings | 5 Program

D11033W01

Full Integrated Dishwasher

- 60 cm
- White Glass Outdoor Panel
- Silver Colour Control Panel
- White LED Light
- 12 Capacity Settings
- A+ Energy Level
- 12L water consumption
- 49dB Noise Level
- 1-24 hr delay start
- Child Lock
- Grey baskets
- 5 programs
- Electronic Aqua Stop
- Stainless Steel Filter

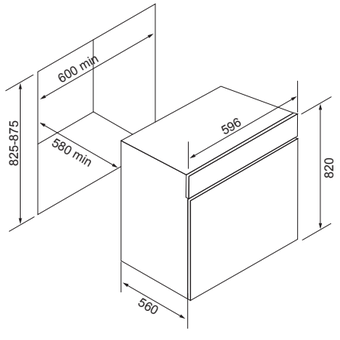

A+++ | 12 Settings | 3 Program

ABM11029X01

Semi Integrated Dishwasher

- 60 cm
- Inox control panel+SS inner cavity + Silver Body
- 12 place settings
- 13L water consumption
- Grey baskets
- 49dB Noise Level
- A++ Energy Level
- Stainless Steel Filter
- White LED indicator
- 3/6/9 hr delay start
- Electronic Aqua Stop
- 3 programs

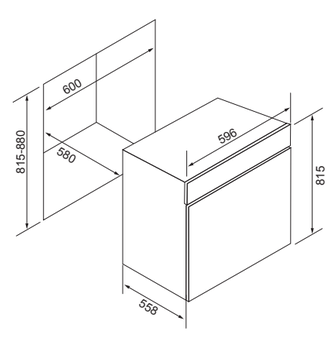

DISHWASHERS

A++ | 12 Settings | 6 Program

D11030B01

Semi Integrated Dishwasher

- 60 cm
- Plastic black control panel + SS innver cavity + Black Body
- 12 Capacity Settings
- A++ Energy Level
- 49dB Noise Level
- White LED Light
- Grey Basket
- Stainless Steel Filter
- 1-24 hr delay start
- 6 programs
- 11L water consumption
- Child Lock
- Electronic Aqua Stop

A++ | 12 Settings | 6 Program

D11012X01

Semi-Integrated Dishwasher

- 60 cm
- White body Silver Control Panel Silver button S.S Control Panel Inlay
- 12 place settings
- 6 Programs
- A++AA
- Aquastop inlet hose
- Delay Start (3/6/9/12 hours)
- 48 dB
- Grey basket colour (2 basket levels)
- 1x Basket Handle
- 3080 l water consumption
- White LED indicator
- Sliding Dispenser
- Water softener

A++ | 12 Settings | 6 Program

ABM11028B01

Semi Integrated Dishwasher

- 60 cm
- Inox control panel+SS inner cavity + Silver Body
- Inox Frame Black Touch Control Panel
- 12 place settings
- 11,5L water consumption
- A++ Energy Level
- 6 programs
- Grey basket
- Stainless Steel Filter
- White LED indicator
- 1-24 hr delay start
- Electronic Aqua Stop
- Child Lock

A+ | 14 Settings | 8 Program

D11026X01

Fressstanding

- Inox Door
- 14 Place Sets
- 10 l Water Consumption
- 8 Program
- A+
- 52db
- LED Screen
- 40 HQ : 162 pcs

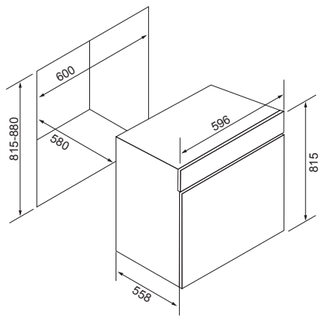

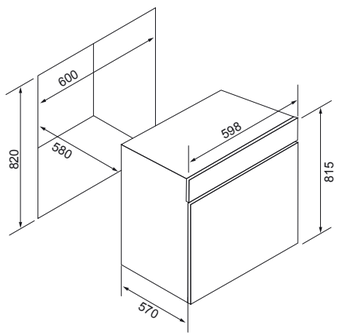

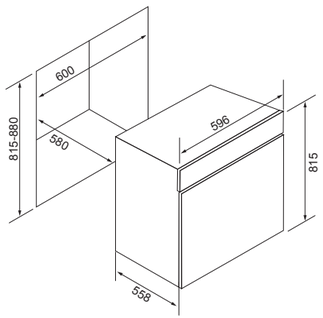

WASHING MACHINE

Silverline washing machines are designed to meet a multitude of requirements while fitting perfectly into any home and space.

WASHING MACHINE

A++ | 6 Kg | 8 Program

WM14016S01

Washing Machine

- A++
- Washing Capacity : 6 KG
- 48Water consumption (L/Cycle)
- 0,77Energy Consumption (kWh/Cycle)
- 10560Water Consumption (L/Anual)
- 170Energy Consumption (kWh/Anual)
- Weight53
- Weight with packing57
- 1000 RPM
- 8 program
- Drum 41L
- Prewash
- Pre Delay/Time Delay
- Child-Lock
- Adjustable Leg10
- Loading Quantit (40HQ) 225
- Silver Color
- Free standing Washing Machine
- Dimension (W*D*H)595x480x850 mm
- Dimension with packing (W*D*H)657x535x885 mm

A+++ | 7 Kg | 12 Program

WM14017S01

Washing Machine

- A+++
- Washing Capacity : 7 KG
- Water consumption (L/Cycle)52,5
- Energy Consumption (kWh/Cycle)0,89
- Water Consumption (L/Anual)11500
- Energy Consumption (kWh/Anual)196
- Weight58
- Weight with packing63
- 1200 RPM
- 12 program
- Drum 58L
- Pre Delay/Time Delay
- Child-Lock
- Adjustable Leg10
- Loading Quantity (40HQ) 215
- Silver colour
- Small Led display
- Operation voltage AC 220-240V
- Rated Frequency50Hz
- Rated Heating Input power (W)2000W
- Max.Input Power (W)2200W
- Rated Washing Input power (W)320W
- Spinning Input power (W)520W
- Tub Clean
- Spin Only
- No Spin
- Dimension (W*D*H)595x510x850 mm
- Dimension with packing (W*D*H)660x645x885 mm

A+++ | 8 Kg | 16 Program

WM14010S01

Washing Machine

- Efficiency A+++
- Capacity Range 8kg
- Max Spin Speed 1400 RPM
- Self diagnose
- Fault Check
- Overheating Control
- Delay Start
- Auto balance / Child Lock
- Super Size Door
- Colour SILVER
- Led Display
- Loading Quantities (20ft/40ft/40HC): 70/144/225
- Speed & Storm Wash
- Pre-wash / My Cycle / Extra rinse
- Baby wash / Wool
- Black Carbon Door

B | 8 Kg | 16 Program

WD14009W01

Washing Machine

- B Energy Class
- White
- 8 kg washing capacity/6 kg drying capacity
- Energy consumption: 1296 kWh/year
- Water consumption: 20800L/year
- 16 Programs
- Delay programme (24 hours)
- Child Lock
- Loading Quantities (20ft/40ft/40HC): 70/144/225
- LED Display
- 1400rpm spin speed
- Volume of inner Tub: 52,7 L
- Mute-washing
- Memory (Press 3 seconds)
- Reload (Press 3 seconds)
- Prewash
- intensive
- Speed Wash
- Extra Rinse
- Easy iron
- Spin Speed Selection
- Temperature Selection
- 31 cm door diameter
- Noise Level-Wash/Dry (dB): 59/62
- Product Dimensions (WxDxH): 595* 470* 850mm
- Box Dimensions (WxDxH): 655* 555* 885mm

A+++ | 8,5 Kg | 16 Program

WM14015B01

Washing Machine

- Black Colour
- 8,5 kg front loading
- net weight: 60kg
- gross weight: 63kg
- Solo Washing Machine
- chrome door & plastic cover & chrome knob
- 1200 rpm
- Time delay
- delay, rinse, speed, temp, add garment, child lock,
- sound off button control
- wash noise level 62 db
- spin noise level 75 db
- 220-240v/50hz
- Single water inlet
- Big led display
- Eu plug
- Child lock
- Door lock
- 40 hq 171 pcs
- Time display
- 3 phae motor inveter control
- net 595*560*850 mm
- gross 650*615*890 mm

A | 10 Kg | 16 Program

WD14008S01

Washing Machine

- Energy Efficiency Class A
- Colour : Silver
- Net Weight : 73 Kg
- Gross Weight : 77 Kg
- Rated Power Supply : 220-240 V
- Rated Frequency : 50 Hz
- Rated Washing Capacity : 10 Kg
- Rated Spinning Capacity : 10 Kg
- Rated drying Capacity : 7 Kg
- Rated Power : 2000 W
- Rated Current : 10 A
- Power consumption left-on mode : 1 W
- Power consumption off-mode : 0,5 W
- Max. Spin Speed : 1600 RPM
- Standard Water Pressure : 0.05 1 Mpa
- Display Type : LED
- Display Colour : Orange
- Door Lock : Electromagnetic Lock
- Motor : BLDC Motor
- Plug type : Euro Plug
- Power cord length : 1,5 M
- Water Inlet Hose Length : 1 M
- Water Outlet Hose Length : 1,6 M
- Washing Performance Class : A
- Spin-drying Effiency Class : A
- Wash Ratio : 1,03
- Moisture Ratio : 45%
- Number Of Program : 16
- Volume Of Inner Tub : 70 L
- Diameter Of Inner Tub : 510 mm
- Door Diameter : 330 mm
- Door Outer Frame Diameter (outer) : 480 mm
- Loading Quantities (20ft/40ft/40HC) : 48/102/153
- Net Dimensions (WxDxH) : 595 x 565 x 850
- Gross Dimensions (WxDxH) : 680 x 695 x 875

WASHING MACHINE

A+++ | 9 Kg | 16 Program

WM14007X01

Washing Machine

- Energy Efficiency Class : A+++ -10%
- Colour : Inox
- Net Weight : 71 Kg
- Gross Weight : 76 Kg
- Rated Power Supply : 220-240 V
- Rated Frequency : 50 Hz
- Rated Washing Capacity : 9 Kg
- Rated Spinning Capacity : 9 Kg
- Rated Power : 2000 W
- Rated Current : 10 A
- Power consumption left-on mode : 1 W
- Power consumption off-mode : 0,5 W
- Max. Spin Speed : 1400 RPM
- Standard Water Pressure : 0.05~1 Mpa
- Display Type : LED
- Display Colour : Orange
- Door Lock : PTC Lock
- Motor : AC Motor
- Plug type : Euro Plug
- Power cord length : 1,5 M
- Water Inlet Hose Length : 1 M
- Water Outlet Hose Length : 1,6 M
- Moisture Ratio : 53%
- Number Of Program : 16
- Volume Of Inner Tub : 56,2 L
- Diameter Of Inner Tub : 472 mm
- Port hole : 310 mm
- Door Outer Frame Diameter (outer) : 480 mm
- Loading Quantities (20ft/40ft/40HC) : 48/108/159
- Net Dimensions (W×D×H) : 595 × 565 × 850
- Gross Dimensions (W×D×H) : 680 × 660 × 875

NOTES

NOTES

www.silverline.com

SILVERLINE BUILT-IN APPLIANCES CO.
Silkar Plaza. Topkapı-Maltepe St. No: 6 Floor: 3
Bayrampaşa / İstanbul / TURKEY P.O. 34030
Phone: +90212.484 48 00 (pbx) Fax. +90212.481 40 08

contact@silverline.com